深圳市龙之创机电设备有限公司

Shenzhen Longzhichuang Electromechanical Equipment Co., Ltd

广东省深圳市龙岗区龙城街道龙平西路4号志达工业园1A栋312

Add.: R312 1A Building, Zhida Industrial Park, Longping Western Road,
Longcheng Street, Longgang District, Shenzhen, Guangdong, China.

Tel: 0755-6111 0043

Mobile: +86-159 9957 6225

E-mail: sales@longzhi-chuang.com

Website: http://www.longzhi-chuang.com

Alibaba: https://longzhichuang.en.alibaba.com

磊鑫圣火品牌策划 GOLD·FIRE
139 2291 9046 139 2291 9577

LONGZHICHUANG CO.,LTD

深圳市龙之创机电设备有限公司

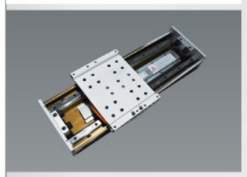

- Linear guide
- Ball screw
- Linear motor accessories
- Ball screw module
- Aluminum alloy module
- KK series module
- Linear motor module
- Super precision positioning table

ABOUT US

关于我们

深圳市龙之创机电设备有限公司成立于2015年，是广东深圳一家专业销售机械传动零部件以及工业配件的公司。目主要服务于玻璃精雕机、智能高光机、非标印刷设备、绕线机、绞织机、机床、数控、自动化设备等。

公司主营产品：精密传动元件-线性导轨、滚珠丝杆、线性模组、直线电机、支撑座、伺服电机、直线电机线性系统、精密定位平台定制等

龙之创可为用户在图纸设计、3D选型、生产、维修及安装过程中提供优异的解决方案。

服务宗旨：龙之创公司始终坚持以质量求生存，本着诚信、务实赢得众多企业的信赖和好评！

Longzhichuang Co.,Ltd., is located in Shenzhen, Guangdong, north of China, which was founded in 2015, it just have 6 years old, but we have more than 10 years in linear motion parts field, all of our engineer deal with this field before 2010. Our main product is ball screw, ballscrew nut, linear guide rail and block, linear motor, servo motor, step motor, linear module (it also call single axis robot), linear bearing, linear shaft, ball screw support, coupling, XYZ gantry working table, all parts of linear motion transmission. We not only have standard product, but also we can aceept customized product, for customized product you need offer us details specification and size details drawing.

And here we have professional engineer team to offer you all linear motion solution, you only need offer us what specification you need and require, then our engineer can be offer you solution, and after you confirmed and place order, our engineer can build 3D model to you before production.
Finally we have friendly sales team, we will service you in good feeling and good after sales.

Based on the idea that quality is the life of the business, people-oriented and win-win, the company will actively forge ahead, constantly explore and innovate, and create a better future with you with first-class products and expert services!

Application

- Semiconductor production and testing equipment
- High-end electronic equipment
- High-precision measuring equipment
- Aerospace
- Precision instrument
- Medical instruments

ITEM INDEX

分類索引

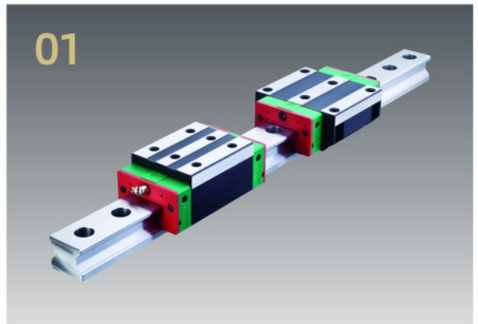

LINEAR GUIDE
标准型直线导轨
PAGE. 01~08

BALL SCREW
标准型滚珠丝杆
PAGE. 09~18

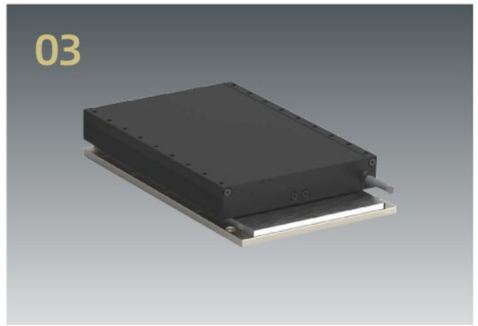

LINEAR MOTOR ACCESSORIES
直线电机动\定子
PAGE. 19~32

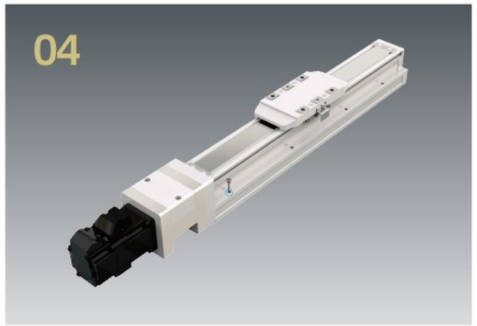

BALL SCREW MODULE
滚珠丝杆模组
PAGE. 33~50

ALUMINUM ALLOY MODULE
铝合金材质模组
PAGE. 51~58

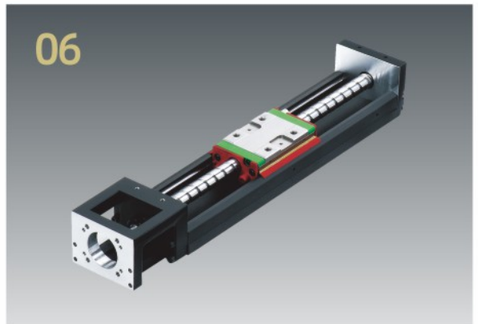

KK SERIES MODULE
上银KK系列模组
PAGE. 59~70

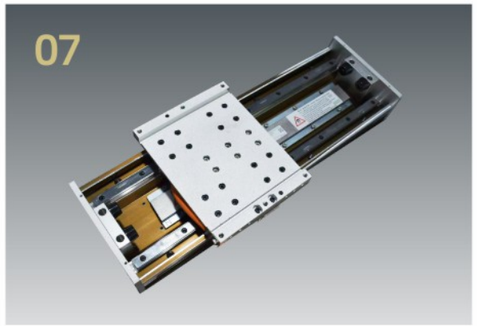

LINEAR MOTOR MODULE
直线电机模组
PAGE. 71~82

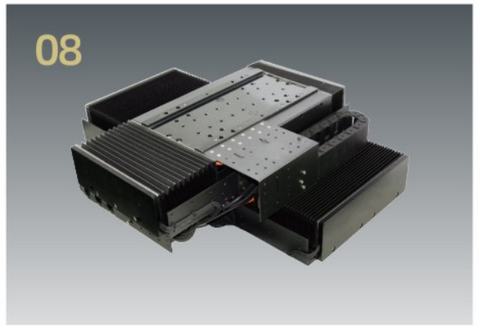

SUPER PRECISION POSITIONING TABLE
精密定位平台
PAGE. 83~92

01

Series

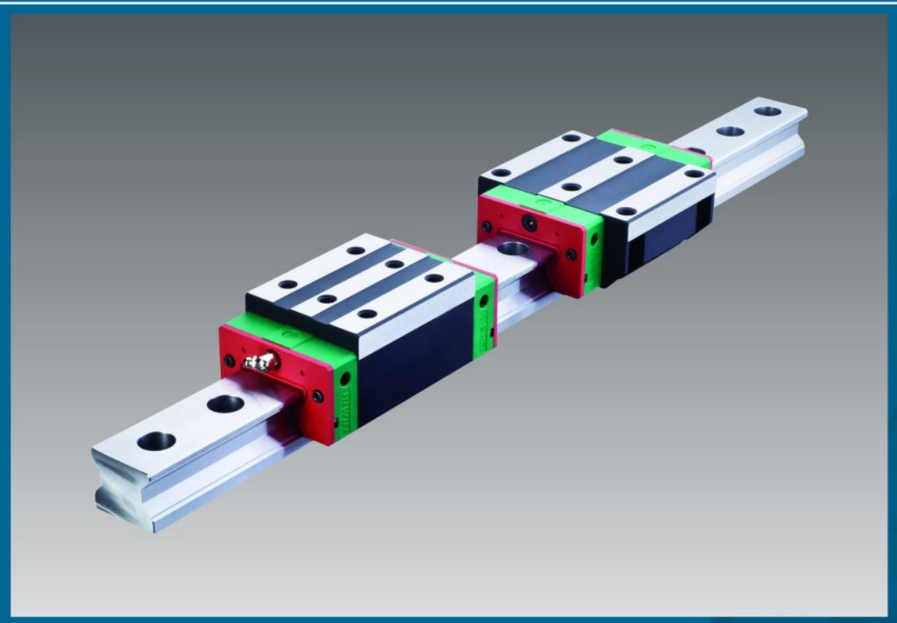

LINEAR GUIDE

标准型直线导轨

longzhichuang Co.,Ltd

Website: http://www.longzhi-chuang.com
Alibaba: https://longzhichuang.en.alibaba.com

LINEAR GUIDE
标准型直线导轨

HG SERIES

Heavy Load Ball Type

HG 系列线性滑轨尺寸表

HGH-CA / HGH-HA

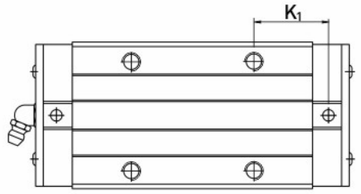

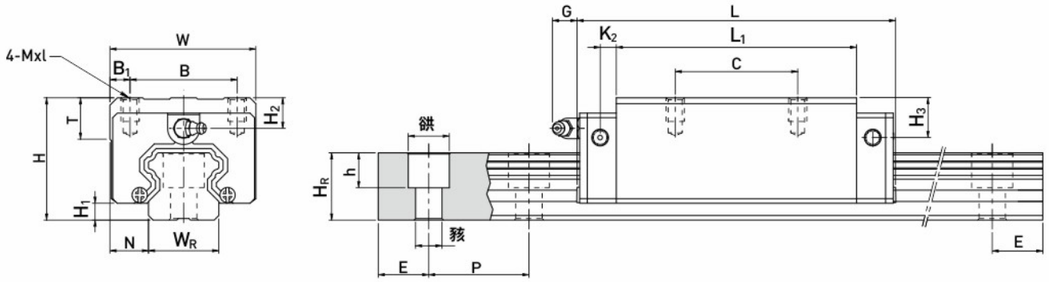

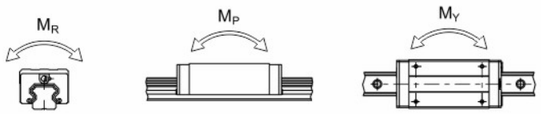

Model No.	Dimensions of Assembly (mm)			Dimensions of Block(mm)													Dimensions of Rail (mm)							Mounting Bolt for Rail	Basic Dynamic Load Rating	Basic Static Load Rating	Static Rated Moment			Weight	
	H	H_1	N	W	B	B_1	C	L_1	L	K_1	K_2	G	Mxl	T	H_2	H_3	W_R	H_R	D	h	d	P	E	(mm)	C(kN)	C_0(kN)	M_R kN-m	M_P kN-m	M_Y kN-m	Block kg	Rail kg/m
HGH15CA	28	4.3	9.5	34	26	4	26	39.4	61.4	10	4.85	5.3	M4x5	6	7.95	7.7	15	15	7.5	5.3	4.5	60	20	M4x16	14.7	23.47	0.12	0.10	0.10	0.18	1.45
HGH20CA	30	4.6	12	44	32	6	36	50.5	77.5	12.25	6	12	M5x6	8	6	6	20	17.5	9.5	8.5	6	60	20	M5x16	27.1	36.68	0.27	0.20	0.20	0.30	2.21
HGH20HA							50	65.2	92.2	12.6															32.7	47.96	0.35	0.35	0.35	0.39	
HGH25CA	40	5.5	12.5	48	35	6.5	35	58	84	15.7	6	12	M6x8	8	10	9	23	22	11	9	7	60	20	M6x20	34.9	52.82	0.42	0.33	0.33	0.51	3.21
HGH25HA							50	78.6	104.6	18.5															42.2	69.07	0.56	0.57	0.57	0.69	
HGH30CA	45	6	16	60	40	10	40	70	97.4	20.25	6	12	M8x10	8.5	9.5	13.8	28	26	14	12	9	80	20	M8x25	48.5	71.87	0.66	0.53	0.53	0.88	4.47
HGH30HA							60	93	120.4	21.75															58.6	93.99	0.88	0.92	0.92	1.16	
HGH35CA	55	7.5	18	70	50	10	50	80	112.4	20.6	7	12	M8x12	10.2	16	19.6	34	29	14	12	9	80	20	M8x25	64.6	93.88	1.16	0.81	0.81	1.45	6.30
HGH35HA							72	105.8	138.2	22.5															77.9	122.77	1.54	1.40	1.40	1.92	
HGH45CA	70	9.5	20.5	86	60	13	60	97	139.4	23	10	12.9	M10x17	16	18.5	30.5	45	38	20	17	14	105	22.5	M12x35	103.8	146.71	1.98	1.55	1.55	2.73	10.41
HGH45HA							80	128.8	171.2	28.9															125.3	191.85	2.63	2.68	2.68	3.61	
HGH55CA	80	13	23.5	100	75	12.5	75	117.7	166.7	27.35	11	12.9	M12x18	17.5	22	29	53	44	23	20	16	120	30	M14x45	153.2	211.23	3.69	2.64	2.64	4.17	15.08
HGH55HA							95	155.8	204.8	36.4															184.9	276.23	4.88	4.57	4.57	5.49	
HGH65CA	90	15	31.5	126	76	25	70	144.2	200.2	43.1	14	12.9	M16x20	25	15	15	63	53	26	22	18	150	35	M16x50	213.2	287.48	6.65	4.27	4.27	7.00	21.18
HGH65HA							120	203.6	259.6	47.8															277.8	420.17	9.38	7.38	7.38	9.82	

Note : 1 kgf = 9.81 N

HG SERIES

Heavy Load Ball Type

HG 系列线性滑轨尺寸表

HGW-CA / HGW-HA

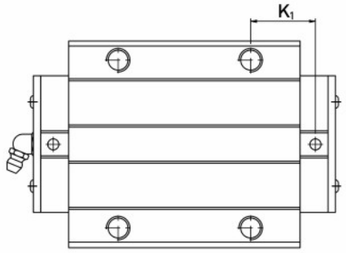

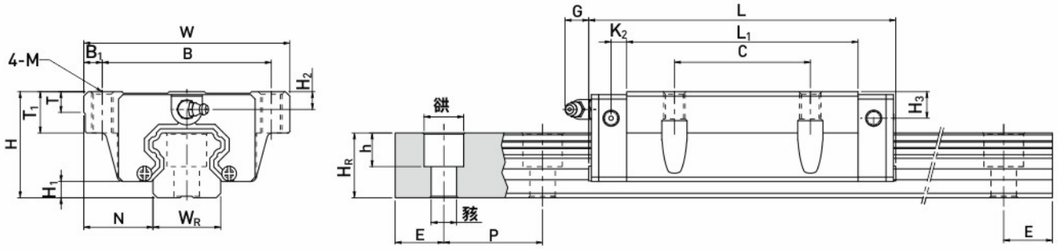

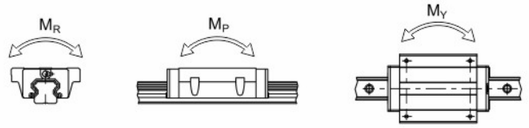

Model No.	Dimensions of Assembly (mm)			Dimensions of Block(mm)													Dimensions of Rail (mm)							Mounting Bolt for Rail	Basic Dynamic Load Rating	Basic Static Load Rating	Static Rated Moment			Weight	
	H	H_1	N	W	B	B_1	C	L_1	L	K_1	K_2	G	M	T	T_1	H_2	H_3	W_R	H_R	D	h	d	P	E	(mm)	C(kN)	C_0(kN)	M_R kN-m	M_P kN-m	M_Y kN-m	Block kg	Rail kg/m
HGW15CA	24	4.3	16	47	38	4.5	30	39.4	61.4	8	4.85	5.3	M5	6	8.9	3.95	3.7	15	15	7.5	5.3	4.5	60	20	M4x16	14.7	23.47	0.12	0.10	0.10	0.17	1.45
HGW20CA	30	4.6	21.5	63	53	5	40	50.5	77.5	10.25	6	12	M6	8	10	6	6	20	17.5	9.5	8.5	6	60	20	M5x16	27.1	36.68	0.27	0.20	0.20	0.40	2.21
HGW20HA								65.2	92.2	17.6															32.7	47.96	0.35	0.35	0.35	0.52	
HGW25CA	36	5.5	23.5	70	57	6.5	45	58	84	10.7	6	12	M8	8	14	6	5	23	22	11	9	7	60	20	M6x20	34.9	52.82	0.42	0.33	0.33	0.59	3.21
HGW25HA								78.6	104.6	21															42.2	69.07	0.56	0.57	0.57	0.80	
HGW30CA	42	6	31	90	72	9	52	70	97.4	14.25	6	12	M10	8.5	16	6.5	10.8	28	26	14	12	9	80	20	M8x25	48.5	71.87	0.66	0.53	0.53	1.09	4.47
HGW30HA								93	120.4	25.75															58.6	93.99	0.88	0.92	0.92	1.44	
HGW35CA	48	7.5	33	100	82	9	62	80	112.4	14.6	7	12	M10	10.1	18	9	12.6	34	29	14	12	9	80	20	M8x25	64.6	93.88	1.16	0.81	0.81	1.56	6.30
HGW35HA								105.8	138.2	27.5															77.9	122.77	1.54	1.40	1.40	2.06	
HGW45CA	60	9.5	37.5	120	100	10	80	97	139.4	13	10	12.9	M12	15.1	22	8.5	20.5	45	38	20	17	14	105	22.5	M12x35	103.8	146.71	1.98	1.55	1.55	2.79	10.41
HGW45HA								128.8	171.2	28.9															125.3	191.85	2.63	2.68	2.68	3.69	
HGW55CA	70	13	43.5	140	116	12	95	117.7	166.7	17.35	11	12.9	M14	17.5	26.5	12	19	53	44	23	20	16	120	30	M14x45	153.2	211.23	3.69	2.64	2.64	4.52	15.08
HGW55HA								155.8	204.8	36.4															184.9	276.23	4.88	4.57	4.57	5.96	
HGW65CA	90	15	53.5	170	142	14	110	144.2	200.2	23.1	14	12.9	M16	25	37.5	15	15	63	53	26	22	18	150	35	M16x50	213.2	287.48	6.65	4.27	4.27	9.17	21.18
HGW65HA								203.6	259.6	52.8															277.8	420.17	9.38	7.38	7.38	12.89	

Note : 1 kgf = 9.81 N

LINEAR GUIDE
标准型直线导轨

EG SERIES

Low Profile Ball Type

EG 系列线性滑轨尺寸表

EGH-SA / EGH-CA

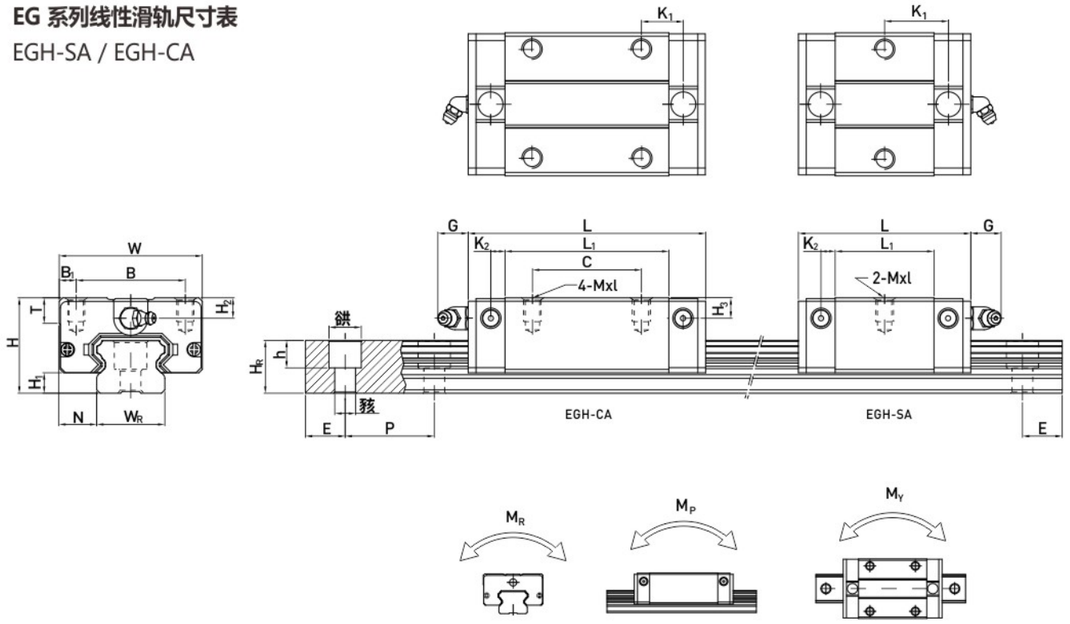

Model No.	Dimensions of Assembly (mm)			Dimensions of Block (mm)														Dimensions of Rail (mm)							Mounting Bolt for Rail	Basic Dynamic Load Rating	Basic Static Load Rating	Static Rated Moment			Weight	
	H	H_1	N	W	B	B_1	C	L_1	L	K_1	K_2	G	Mxl	T	H_2	H_3	W_R	H_R	D	h	d	P	E	(mm)	C(kN)	C_0(kN)	M_R kN-m	M_P kN-m	M_Y kN-m	Block kg	Rail kg/m
EGH15SA	24	4.5	9.5	34	26	4	-	23.1	40.1	14.8	3.5	5.7	M4x6	6	5.5	6	15	12.5	6	4.5	3.5	60	20	M3x16	5.35	9.40	0.08	0.04	0.04	0.09	1.25
EGH15CA							26	39.8	56.8	10.15															7.83	16.19	0.13	0.10	0.10	0.15	
EGH20SA	28	6	11	42	32	5	-	29	50	18.75	4.15	12	M5x7	7.5	6	6	20	15.5	9.5	8.5	6	60	20	M5x16	7.23	12.74	0.13	0.06	0.06	0.15	2.08
EGH20CA							32	48.1	69.1	12.3															10.31	21.13	0.22	0.16	0.16	0.24	
EGH25SA	33	7	12.5	48	35	6.5	-	35.5	59.1	21.9	4.55	12	M6x9	8	8	8	23	18	11	9	7	60	20	M6x20	11.40	19.50	0.23	0.12	0.12	0.25	2.67
EGH25CA							35	59	82.6	16.15															16.27	32.40	0.38	0.32	0.32	0.41	
EGH30SA	42	10	16	60	40	10	-	41.5	69.5	26.75	6	12	M8x12	9	8	9	28	23	11	9	7	80	20	M6x25	16.42	28.10	0.40	0.21	0.21	0.45	4.35
EGH30CA							40	70.1	98.1	21.05															23.70	47.46	0.68	0.55	0.55	0.76	
EGH35SA	48	11	18	70	50	10	-	45	75	28.5	7	12	M8x12	10	8.5	8.5	34	27.5	14	12	9	80	20	M8x25	22.66	37.38	0.56	0.31	0.31	0.66	6.14
EGH35CA							50	78	108	20															33.35	64.84	0.98	0.69	0.69	1.13	

Note : 1 kgf = 9.81 N

LINEAR GUIDE
标准型直线导轨

EG SERIES

Low Profile Ball Type

EG 系列线性滑轨尺寸表

EGW-SA / EGW-CA

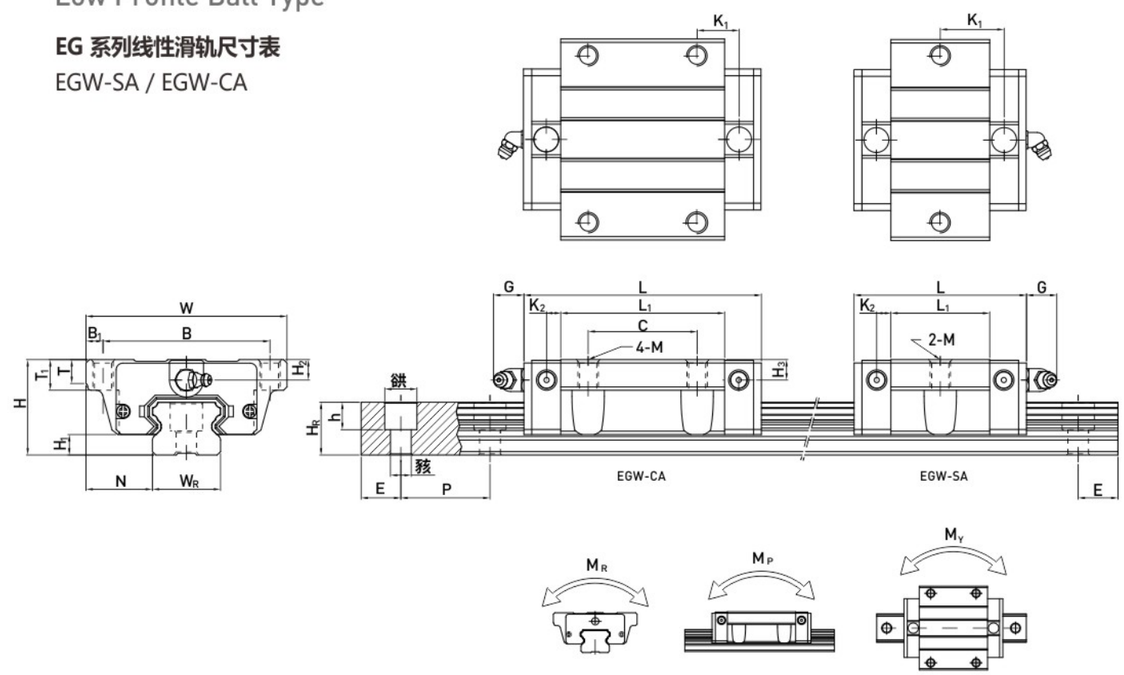

Model No.	Dimensions of Assembly (mm)			Dimensions of Block (mm)														Dimensions of Rail (mm)							Mounting Bolt for Rail	Basic Dynamic Load Rating	Basic Static Load Rating	Static Rated Moment			Weight	
	H	H_1	N	W	B	B_1	C	L_1	L	K_1	K_2	G	M	T	T_1	H_2	H_3	W_R	H_R	D	h	d	P	E	(mm)	C(kN)	C_0(kN)	M_R kN-m	M_P kN-m	M_Y kN-m	Block kg	Rail kg/m
EGW15SA	24	4.5	18.5	52	41	5.5	-	23.1	40.1	14.8	3.5	5.7	M5	5	7	5.5	6	15	12.5	6	4.5	3.5	60	20	M3x16	5.35	9.40	0.08	0.04	0.04	0.12	1.25
EGW15CA							26	39.8	56.8	10.15															7.83	16.19	0.13	0.10	0.10	0.21	
EGW20SA	28	6	19.5	59	49	5	-	29	50	18.75	4.15	12	M6	7	9	6	6	20	15.5	9.5	8.5	6	60	20	M5x16	7.23	12.74	0.13	0.06	0.06	0.19	2.08
EGW20CA							32	48.1	69.1	12.3															10.31	21.13	0.22	0.16	0.16	0.32	
EGW25SA	33	7	25	73	60	6.5	-	35.5	59.1	21.9	4.55	12	M8	7.5	10	8	8	23	18	11	9	7	60	20	M6x20	11.40	19.50	0.23	0.12	0.12	0.35	2.67
EGW25CA							35	59	82.6	16.15															16.27	32.40	0.38	0.32	0.32	0.59	
EGW30SA	42	10	31	90	72	9	-	41.5	69.5	26.75	6	12	M10	7	10	8	9	28	23	11	9	7	80	20	M6x25	16.42	28.10	0.40	0.21	0.21	0.62	4.35
EGW30CA							40	70.1	98.1	21.05															23.70	47.46	0.68	0.55	0.55	1.04	
EGW35SA	48	11	33	100	82	9	-	45	75	28.5	7	12	M10	10	13	8.5	8.5	34	27.5	14	12	9	80	20	M8x25	22.66	37.38	0.56	0.31	0.31	0.84	6.14
EGW35CA							50	78	108	20															33.35	64.84	0.98	0.69	0.69	1.45	

Note : 1 kgf = 9.81 N

LINEAR GUIDE
标准型直线导轨

MG SERIES

Miniature Type

MGN/MGW 系列线性滑轨尺寸表

MGN-C / MGN-H

MGN7, MGN9, MGN12

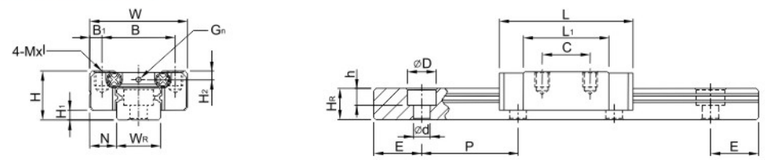

MGN15

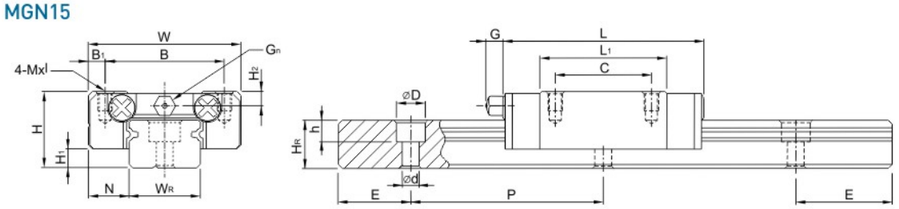

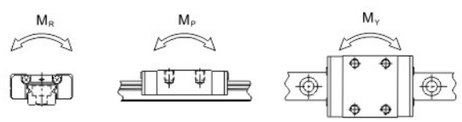

Model No.	Dimensions of Assembly (mm)			Dimensions of Block (mm)										Dimensions of Rail (mm)							Mounting Bolt for Rail	Basic Dynamic Load Rating	Basic Static Load Rating	Static Rated Moment			Weight	
	H	H_1	N	W	B	B_1	C	L_1	L	G	G_n	Mxl	H_2	W_R	H_R	D	h	d	P	E	(mm)	C(kN)	C_0 (kN)	M_R N-m	M_P N-m	M_Y N-m	Block kg	Rail kg/m
MGN 7C	8	1.5	5	17	12	2.5	8	13.5	22.5	-	Ø1.2	M2x2.5	1.5	7	4.8	4.2	2.3	2.4	15	5	M2x6	0.98	1.24	4.70	2.84	2.84	0.010	0.22
MGN 7H							13	21.8	30.8													1.37	1.96	7.64	4.80	4.80	0.015	
MGN 9C	10	2	5.5	20	15	2.5	10	18.9	28.9	-	Ø1.4	M3x3	1.8	9	6.5	6	3.5	3.5	20	7.5	M3x8	1.86	2.55	11.76	7.35	7.35	0.016	0.38
MGN 9H							16	29.9	39.9													2.55	4.02	19.60	18.62	18.62	0.026	
MGN 12C	13	3	7.5	27	20	3.5	15	21.7	34.7	-	Ø2	M3x3.5	2.5	12	8	6	4.5	3.5	25	10	M3x8	2.84	3.92	25.48	13.72	13.72	0.034	0.65
MGN 12H							20	32.4	45.4													3.72	5.88	38.22	36.26	36.26	0.054	
MGN 15C	16	4	8.5	32	25	3.5	20	26.7	42.1	4.5	M3	M3x4	3	15	10	6	4.5	3.5	40	15	M3x10	4.61	5.59	45.08	21.56	21.56	0.059	1.06
MGN 15H							25	43.4	58.8													6.37	9.11	73.50	57.82	57.82	0.092	

Note : 1 kgf = 9.81 N

MG SERIES

Miniature Type

MGN/MGW 系列线性滑轨尺寸表

MGW-C / MGW-H

MGW7, MGW9, MGW12

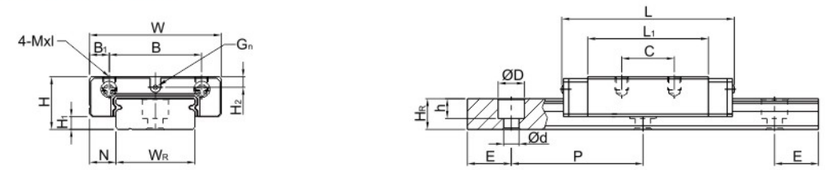

MGW15

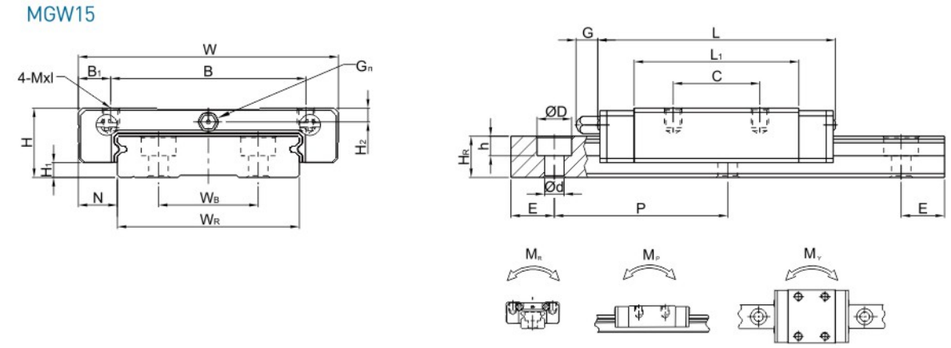

Model No.	Dimensions of Assembly (mm)			Dimensions of Block (mm)										Dimensions of Rail (mm)								Mounting Bolt for Rail	Basic Dynamic Load Rating	Basic Static Load Rating	Static Rated Moment			Weight	
	H	H_1	N	W	B	B_1	C	L_1	L	G	G_n	Mxl	H_2	W_R	W_B	H_R	D	h	d	P	E	(mm)	C(kN)	C_0 (kN)	M_R N-m	M_P N-m	M_Y N-m	Block kg	Rail kg/m
MGW 7C	9	1.9	5.5	25	19	3	10	21	31.2	-	Ø1.2	M3x3	1.85	14	-	5.2	6	3.2	3.5	30	10	M3x6	1.37	2.06	15.70	7.14	7.14	0.020	0.51
MGW 7H							19	30.8	41														1.77	3.14	23.45	15.53	15.53	0.029	
MGW 9C	12	2.9	6	30	21	4.5	12	27.5	39.3	-	Ø1.2	M3x3	2.4	18	-	7	6	4.5	3.5	30	10	M3x8	2.75	4.12	40.12	18.96	18.96	0.040	0.91
MGW 9H					23	3.5	24	38.5	50.7														3.43	5.89	54.54	34.00	34.00	0.057	
MGW 12C	14	3.4	8	40	28	6	15	31.3	46.1	-	Ø1.2	M3x3.6	2.8	24	-	8.5	8	4.5	4.5	40	15	M4x8	3.92	5.59	70.34	27.80	27.80	0.071	1.49
MGW 12H							28	45.6	60.4														5.10	8.24	102.70	57.37	57.37	0.103	
MGW 15C	16	3.4	9	60	45	7.5	20	38	54.8	5.2	M3	M4x4.2	3.2	42	23	9.5	8	4.5	4.5	40	15	M4x10	6.77	9.22	199.34	56.66	56.66	0.143	2.86
MGW 15H							35	57	73.8														8.93	13.38	299.01	122.60	122.60	0.215	

Note : 1 kgf = 9.81 N

LINEAR GUIDE
标准型直线导轨

RG SERIES

High Rigidity Roller Type

RG 系列线性滑轨尺寸表

RGH-CA / RGH-HA

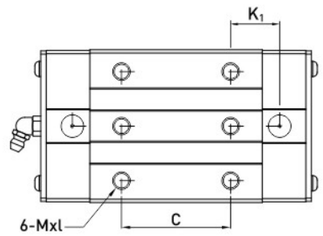

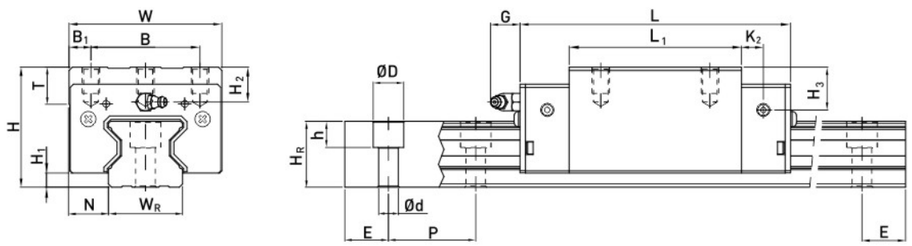

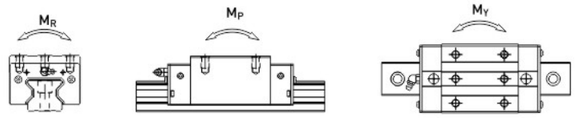

Model No.	Dimensions of Assembly (mm)			Dimensions of Block (mm)													Dimensions of Rail (mm)							Mounting Bolt for Rail	Basic Dynamic Load Rating	Basic Static Load Rating	Static Rated Moment			Weight	
	H	H_1	N	W	B	B_1	C	L_1	L	K_1	K_2	G	Mxl	T	H_2	H_3	W_R	H_R	D	h	d	P	E	(mm)	C(kN)	C_0 (kN)	M_R kN-m	M_P kN-m	M_Y kN-m	Block kg	Rail kg/m
RGH15CA	28	4	9.5	34	26	4	26	45	68	13.4	4.7	5.3	M4 x 8	6	7.6	10.1	15	16.5	7.5	5.7	4.5	30	20	M4 x16	11.3	24	0.311	0.173	0.173	0.20	1.8
RGH20CA	34	5	12	44	32	6	36	57.5	86	15.8	6	5.3	M5 x 8	8	8.3	8.3	20	21	9.5	8.5	6	30	20	M5 x20	21.3	46.7	0.647	0.46	0.46	0.40	2.76
RGH20HA							50	77.5	106	18.8															26.9	63	0.872	0.837	0.837	0.53	
RGH25CA	40	5.5	12.5	48	35	6.5	35	64.5	97.9	20.75	7.25	12	M6 x 8	9.5	10.2	10	23	23.6	11	9	7	30	20	M6 x20	27.7	57.1	0.758	0.605	0.605	0.61	3.08
RGH25HA							50	81	114.4	21.5															33.9	73.4	0.975	0.991	0.991	0.75	
RGH30CA	45	6	16	60	40	10	40	71	109.8	23.5	8	12	M8 x10	9.5	9.5	10.3	28	28	14	12	9	40	20	M8 x25	39.1	82.1	1.445	1.06	1.06	0.90	4.41
RGH30HA							60	93	131.8	24.5															48.1	105	1.846	1.712	1.712	1.16	
RGH35CA	55	6.5	18	70	50	10	50	79	124	22.5	10	12	M8 x12	12	16	19.6	34	30.2	14	12	9	40	20	M8 x25	57.9	105.2	2.17	1.44	1.44	1.57	6.06
RGH35HA							72	106.5	151.5	25.25															73.1	142	2.93	2.6	2.6	2.06	
RGH45CA	70	8	20.5	86	60	13	60	106	153.2	31	10	12.9	M10x17	16	20	24	45	38	20	17	14	52.5	22.5	M12 x35	92.6	178.8	4.52	3.05	3.05	3.18	9.97
RGH45HA							80	139.8	187	37.9															116	230.9	6.33	5.47	5.47	4.13	
RGH55CA	80	10	23.5	100	75	12.5	75	125.5	183.7	37.75	12.5	12.9	M12x18	17.5	22	27.5	53	44	23	20	16	60	30	M14 x45	130.5	252	8.01	5.4	5.4	4.89	13.98
RGH55HA							95	173.8	232	51.9															167.8	348	11.15	10.25	10.25	6.68	
RGH65CA	90	12	31.5	126	76	25	70	160	232	60.8	15.8	12.9	M16 x20	25	15	15	63	53	26	22	18	75	35	M16x50	213	411.6	16.20	11.59	11.59	8.89	20.22
RGH65HA							120	223	295	67.3															275.3	572.7	22.55	22.17	22.17	12.13	

Note : 1. 1 kgf = 9.81 N
2. The theoretical dynamic rated load is C_{100R}, if necessary C_{50R} conversion formula is as follows : $C_{50R} = 1.23 \times C_{100R}$

LINEAR GUIDE
标准型直线导轨

RG SERIES

High Rigidity Roller Type

RG 系列线性滑轨尺寸表

RGW-CC / RGW-HC

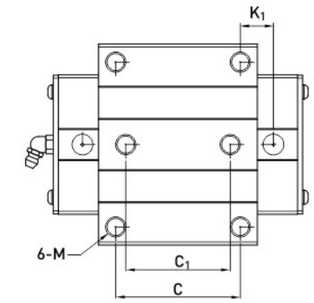

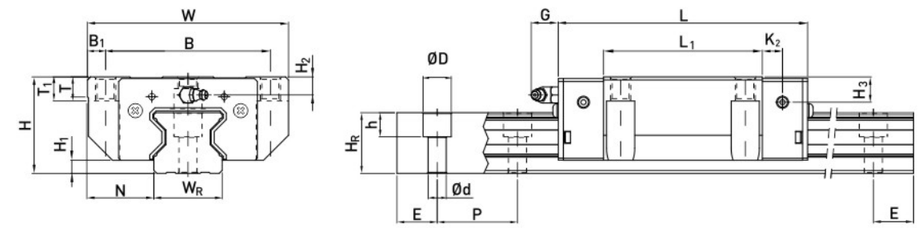

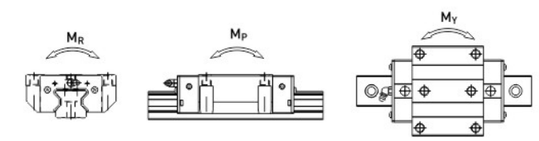

Model No.	Dimensions of Assembly (mm)			Dimensions of Block (mm)														Dimensions of Rail (mm)							Mounting Bolt for Rail	Basic Dynamic Load Rating	Basic Static Load Rating	Static Rated Moment			Weight	
	H	H_1	N	W	B	B_1	C	C_1	L_1	L	K_1	K_2	G	M	T	T_1	H_2	H_3	W_R	H_R	D	h	d	P	E	(mm)	C(kN)	C_0 (kN)	M_R kN-m	M_P kN-m	M_Y kN-m	Block kg	Rail kg/m
RGW15CC	24	4	16	47	38	4.5	30	26	45	68	11.4	4.7	5.3	M5	6	6.95	3.6	6.1	15	16.5	7.5	5.7	4.5	30	20	M4x16	11.3	24	0.311	0.173	0.173	0.22	1.8
RGW20CC	30	5	21.5	63	53	5	40	35	57.5	86	13.8	6	5.3	M6	8	10	4.3	4.3	20	21	9.5	8.5	6	30	20	M5x20	21.3	46.7	0.647	0.46	0.46	0.47	2.76
RGW20HC									77.5	106	23.8																26.9	63	0.872	0.837	0.837	0.63	
RGW25CC	36	5.5	23.5	70	57	6.5	45	40	64.5	97.9	15.75	7.25	12	M8	9.5	10	6.2	6	23	23.6	11	9	7	30	20	M6x20	27.7	57.1	0.758	0.605	0.605	0.72	3.08
RGW25HC									81	114.4	24																33.9	73.4	0.975	0.991	0.991	0.91	
RGW30CC	42	6	31	90	72	9	52	44	71	109.8	17.5	8	12	M10	9.5	10	6.5	7.3	28	28	14	12	9	40	20	M8x25	39.1	82.1	1.445	1.06	1.06	1.16	4.41
RGW30HC									93	131.8	28.5																48.1	105	1.846	1.712	1.712	1.52	
RGW35CC	48	6.5	33	100	82	9	62	52	79	124	16.5	10	12	M10	12	13	9	12.6	34	30.2	14	12	9	40	20	M8x25	57.9	105.2	2.17	1.44	1.44	1.75	6.06
RGW35HC									106.5	151.5	30.25																73.1	142	2.93	2.6	2.6	2.40	
RGW45CC	60	8	37.5	120	100	10	80	60	106	153.2	21	10	12.9	M12	14	15	10	14	45	38	20	17	14	52.5	22.5	M12x35	92.6	178.8	4.52	3.05	3.05	3.43	9.97
RGW45HC									139.8	187	37.9																116	230.9	6.33	5.47	5.47	4.57	
RGW55CC	70	10	43.5	140	116	12	95	70	125.5	183.7	27.75	12.5	12.9	M14	16	17	12	17.5	53	44	23	20	16	60	30	M14x45	130.5	252	8.01	5.4	5.4	5.43	13.98
RGW55HC									173.8	232	51.9																167.8	348	11.15	10.25	10.25	7.61	
RGW 65CC	90	12	53.5	170	142	14	110	82	160	232	40.8	15.8	12.9	M16	22	23	15	15	63	53	26	22	18	75	35	M16x50	213	411.6	16.20	11.59	11.59	11.63	20.22
RGW 65HC									223	295	72.3																275.3	572.7	22.55	22.17	22.17	16.58	

Note : 1. 1 kgf = 9.81 N
2. The theoretical dynamic rated load is C_{100R}, if necessary C_{50R} conversion formula is as follows : $C_{50R} = 1.23 \times C_{100R}$

02

Series

BALL SCREW

标准型滚珠丝杆

longzhichuang Co.,Ltd

Website: http://www.longzhi-chuang.com
Alibaba: https://longzhichuang.en.alibaba.com

PAGE.
09~18

BALL SCREW
标准型滚珠丝杆

滚珠螺桿的公稱代號
Nominal Model Code of Ball Screw

SFU	R	025	05	T4	D	G	C5	600	P1	B2	N3	N3
①	②	③	④	⑤	⑥	⑦	⑧	⑨	⑩	⑪	⑫	⑬

①

Nominal Model	
S	S : Single nut
	D : Double nut
	O : OFF set double nut
F	F : With flange
	C : Without flange
U	NI : NI type nut
	NU : NU type nut
	H : H type nut
	NH : NH nut (A solution for slide table)
	Y : Y type nut
	V : V type nut
	U : DIN nut
	M : M type nut
	K : K type nut

②

Threading Direction
R : Right
L : Left

③

Nominal Diameter
Unit : mm

④

Lead
Unit : mm

⑤

Number of Turns (Turn·Row)
Turn : T : 1
A : 1.5 (or 1.7/1.8)
B : 2.5/2.8
C : 3.5
D : 4.8
ex : (2.5 × 2 = B2)

⑥

Flange Type
N : Not cutting
S : Single cutting
D : Double cutting

⑦

Product Code
G : Ground
F : Rolled

⑧

Accuracy Grade
C0, C1, C2, C3, C5, C7, C10

⑨

Overall Length of Shaft
Unit : mm

⑩

Axial Clearance and Preload Value
P0, P1, P2, P3, P4

⑪

Number of Nut
(Leave blank if only one nut is required) Ex : Install two nuts on a shaft B2

⑫

Nut Surface Treatment
S : Standard
B1 : Black Oxidation
N1 : Hard Chrome Plating
P : Phosphating
N3 : Nickel Plating
N4 : Raydent
N5 : Chrome Plating

⑬

Shaft Surface Treatment
S : Standard
B1 : Black Oxidation
N1 : Hard Chrome Plating
P : Phosphating
N3 : Nickel Plating
N4 : Raydent
N5 : Chrome Plating

精密研磨級滚珠螺桿系列
Precision Ground Ball Screw Series

SFNU/SFU (DIN 69051 FORM B) Series Specifications

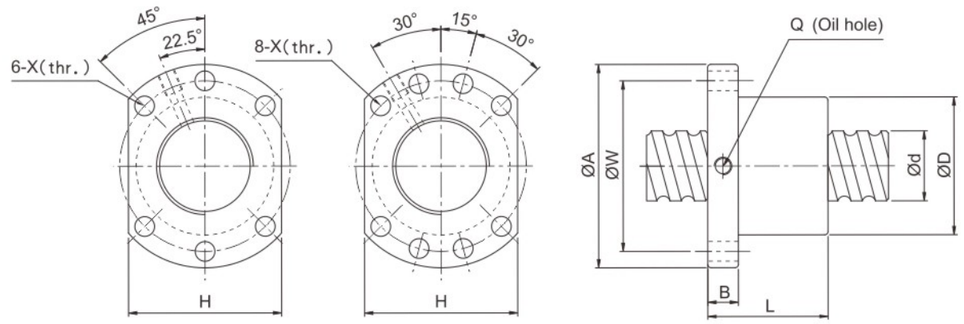

d≦32 d≧40

Unit : mm

Model No.	d	I	Da	Dimension									Load Rating		K
				D	A	B	L	W	H	X	Q	n	Ca (kgf)	Coa (kgf)	kgf/μm
SFNU01605-4☆	16	5	3.175	28	48	10	45	38	40	5.5	M6	1x4	1380	3052	32
SFNU01610-3☆		10	3.175	28	48	10	57	38	40	5.5	M6	1x3	1103	2401	26
SFNU02005-4☆	20	5	3.175	36	58	10	51	47	44	6.6	M6	1x4	1551	3875	39
SFNU02505-4☆	25	5	3.175	40	62	10	51	51	48	6.6	M6	1x4	1724	4904	45
SFNU02510-4☆		10	4.762	40	62	12	80	51	48	6.6	M6	1x4	2954	7295	50
SFNU03205-4☆	32	5	3.175	50	80	12	52	65	62	9	M6	1x4	1922	6343	54
SFNU03210-4☆		10	6.35	50	80	12	85	65	62	9	M6	1x4	4805	12208	61
SFNU04005-4☆	40	5	3.175	63	93	14	55	78	70	9	M8	1x4	2110	7988	63
SFNU04010-4☆		10	6.35	63	93	14	88	78	70	9	M8	1x4	5399	15500	73
SFNU05010-4☆	50	10	6.35	75	110	16	88	93	85	11	M8	1x4	6004	19614	85
SFNU06310-4☆	63	10	6.35	90	125	18	93	108	95	11	M8	1x4	6719	25358	99
SFNU08010-4☆	80	10	6.35	105	145	20	93	125	110	13.5	M8	1x4	7346	31953	109
SFU01204-4	12	4	2.5	24	40	10	40	32	30	4.5		1x4	902	1884	26
SFU01604-4	16	4	2.381	28	48	10	40	38	40	5.5	M6	1x4	973	2406	32
SFU02004-4	20	4	2.381	36	58	10	42	47	44	6.6	M6	1x4	1066	2987	38
SFU02504-4	25	4	2.381	40	62	10	42	51	48	6.6	M6	1x4	1180	3795	43
SFU02506-4		6	3.969	40	62	10	54	51	48	6.6	M6	1x4	2318	6057	47
SFU02508-4		8	4.762	40	62	10	63	51	48	6.6	M6	1x4	2963	7313	49
SFU03204-4	32	4	2.381	50	80	12	44	65	62	9	M6	1x4	1296	4838	51
SFU03206-4		6	3.969	50	80	12	57	65	62	9	M6	1x4	2632	7979	57
SFU03208-4		8	4.762	50	80	12	65	65	62	9	M6	1x4	3387	9622	60
SFU04006-4	40	6	3.969	63	93	14	60	78	70	9	M6	1x4	2873	9913	66
SFU04008-4		8	4.762	63	93	14	67	78	70	9	M6	1x4	3712	11947	70
SFU05020-4	50	20	7.144	75	110	16	138	93	85	11	M8	1x4	7142	22588	94
SFU06320-4	63	20	9.525	95	135	20	149	115	100	13.5	M8	1x4	11444	36653	112
SFU08020-4	80	20	9.525	125	165	25	154	145	130	13.5	M8	1x4	12911	47747	138
SFU10020-4	100	20	9.525	150	202	30	180	170	155	17.5	M8	1x4	14303	60698	162

※ ☆ Left helix available

BALL SCREW
标准型滚珠丝杆

精密研磨級滚珠螺桿系列
Precision Ground Ball Screw Series
OFU/DFU (DIN 69051 FORM B) Series Specifications

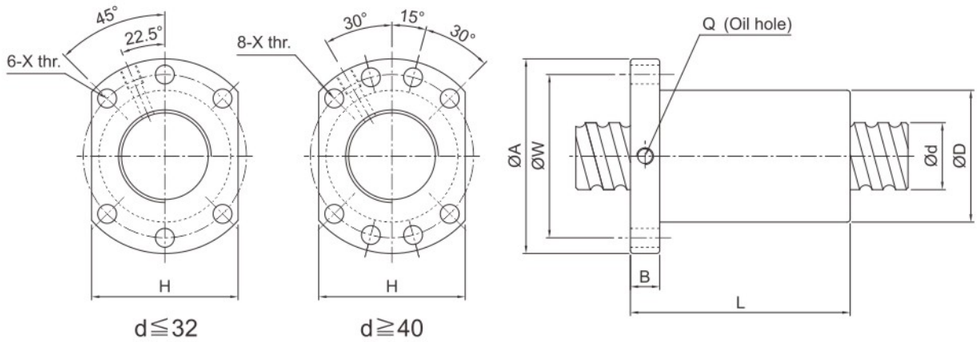

Unit : mm

Model No.	d	I	Da	Dimension									Load Rating		K
				D	A	B	L	W	H	X	Q	n	Ca (kgf)	Coa (kgf)	kgf/μm
OFU01605-4	16	5	3.175	28	48	10	75	38	40	5.5	M6	1x8	1380	3052	44
OFU02005-4	20	5	3.175	36	58	10	85	47	44	6.6	M6	1x8	1551	3875	53
OFU02505-4	25	5	3.175	40	62	10	86	51	48	6.6	M6	1x8	1724	4904	62
OFU02510-4		10	4.762	40	62	12	130	51	48	6.6	M6	1x8	2954	7295	67
OFU03205-4	32	5	3.175	50	80	12	87	65	62	9	M6	1x8	1922	6343	74
OFU03210-4		10	6.35	50	80	12	145	65	62	9	M6	1x8	4805	12208	82
OFU04005-4	40	5	3.175	63	93	14	90	78	70	9	M8	1x8	2110	7988	87
OFU04010-4		10	6.35	63	93	14	148	78	70	9	M8	1x8	5399	15500	99
OFU05010-4	50	10	6.35	75	110	16	148	93	85	11	M8	1x8	6004	19614	117
OFU06310-4	63	10	6.35	90	125	18	153	108	95	11	M8	1x8	6719	25358	139
OFU08010-4	80	10	6.35	105	145	20	153	125	110	13.5	M8	1x8	7346	31953	156
DFU01604-4	16	4	2.381	28	48	10	80	38	40	5.5	M6	1x4	973	2406	43
DFU02004-4	20	4	2.381	36	58	10	80	47	44	6.6	M6	1x4	1066	2987	51
DFU02504-4	25	4	2.381	40	62	10	80	51	48	6.6	M6	1x4	1180	3795	60
DFU02506-4		6	3.969	40	62	10	105	51	48	6.6	M6	1x4	2318	6057	64
DFU02508-4		8	4.762	40	62	10	120	51	48	6.6	M6	1x4	2963	7313	67
DFU03204-4	32	4	2.381	50	80	12	80	65	62	9	M6	1x4	1296	4838	71
DFU03206-4		6	3.969	50	80	12	105	65	62	9	M6	1x4	2632	7979	78
DFU03208-4		8	4.762	50	80	12	122	65	62	9	M6	1x4	3387	9622	82
DFU04006-4	40	6	3.969	63	93	14	108	78	70	9	M6	1x4	2873	9913	91
DFU04008-4		8	4.762	63	93	14	132	78	70	9	M6	1x4	3712	11947	96
DFU05020-4	50	20	7.144	75	110	16	280	93	85	11	M8	1x4	7142	22588	126
DFU06320-4	63	20	9.525	95	135	20	290	115	100	13.5	M8	1x4	11444	36653	152
DFU08020-4	80	20	9.525	125	165	25	295	145	130	13.5	M8	1x4	12911	47747	187
DFU10020-4	100	20	9.525	150	202	30	340	170	155	17.5	M8	1x4	14303	60698	222

精密研磨級滚珠螺桿系列
Precision Ground Ball Screw Series
SFNI/SFI Series Specifications

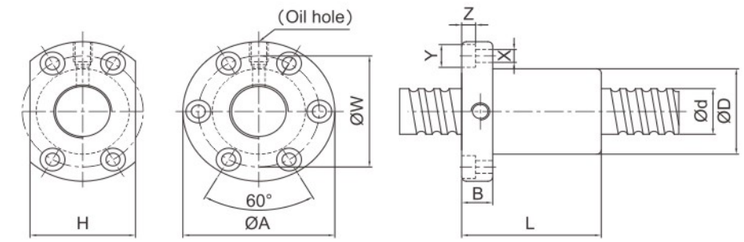

Unit : mm

Model No.	d	I	Da	Dimension											Load Rating		K
				D	A	B	L	W	H	X	Y	Z	Q	n	Ca (kgf)	Coa (kgf)	kgf/μm
SFNI01605-4★	16	5	3.175	30	49	10	45	39	34	4.5	8	4.5	M6	1x4	1380	3052	33
SFNI01610-3★		10	3.175	34	58	10	57	45	34	5.5	9.5	5.5	M6	1x3	1103	2401	27
SFNI02005-4★	20	5	3.175	34	57	11	51	45	40	5.5	9.5	5.5	M6	1x4	1551	3875	39
SFNI02505-4★	25	5	3.175	40	63	11	51	51	46	5.5	9.5	5.5	M8	1x4	1724	4904	45
SFNI02510-4★		10	4.762	46	72	12	80	58	52	6.5	11	6.5	M6	1x4	2954	7295	51
SFNI03205-4★	32	5	3.175	46	72	12	52	58	52	6.5	11	6.5	M8	1x4	1922	6343	52
SFNI03210-4★		10	6.35	54	88	15	85	70	62	9	14	8.5	M8	1x4	4805	12208	62
SFNI04005-4★	40	5	3.175	56	90	15	55	72	64	9	14	8.5	M8	1x4	2110	7988	59
SFNI04010-4★		10	6.35	62	104	18	88	82	70	11	17.5	11	M8	1x4	5399	15500	72
SFNI05010-4★	50	10	6.35	72	114	18	88	92	82	11	17.5	11	M8	1x4	6004	19614	83
SFNI06310-4★	63	10	6.35	85	131	22	93	107	95	14	20	13	M8	1x4	6719	25358	95
SFNI08010-4	80	10	6.35	105	150	22	93	127	115	14	20	13	M8	1x4	7346	31953	109
SFI01604-4	16	4	2.381	30	49	10	45	39	34	4.5	8	4.5	M6	1x4	973	2406	32
SFI02004-4	20	4	2.381	34	57	11	46	45	40	5.5	9.5	5.5	M6	1x4	1066	2987	37
SFI0205T-4		5.08	3.175	34	57	11	51	45	40	5.5	9.5	5.5	M6	1x4	1550	3875	39
SFI02504-4★	25	4	2.381	40	63	11	46	51	46	5.5	9.5	5.5	M6	1x4	1180	3795	43
SFI0255T-4		5.08	3.175	40	63	11	51	51	46	5.5	9.5	5.5	M8	1x4	1724	4903	45
SFI03204-4	32	4	2.381	46	72	12	47	58	52	6.5	11	6.5	M6	1x4	1296	4838	49

SFM Series Specifications

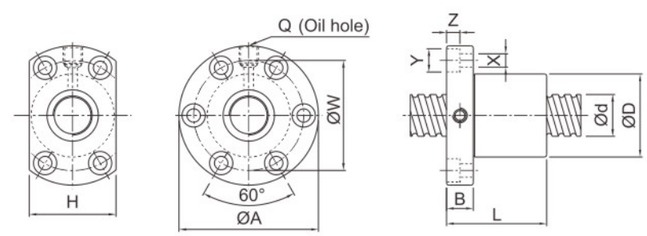

Unit : mm

Model No.	d	I	Da	Dimension											Load Rating		K
				D	A	B	L	W	H	X	Y	Z	Q	n	Ca (kgf)	Coa (kgf)	kgf/μm
SFM03205-4★	32	5	3.175	48	74	12	52	60	60	6.5	11	6.5	M8	1x4	1922	6343	53
SFM0325T-4★		5.08	3.175	48	74	12	53	60	60	6.5	11	6.5	M8	1x4	1922	6343	53

※ ☆ Left helix available

BALL SCREW
标准型滚珠丝杆

精密研磨級滚珠螺桿系列
Precision Ground Ball Screw Series
SFY Series Specifications

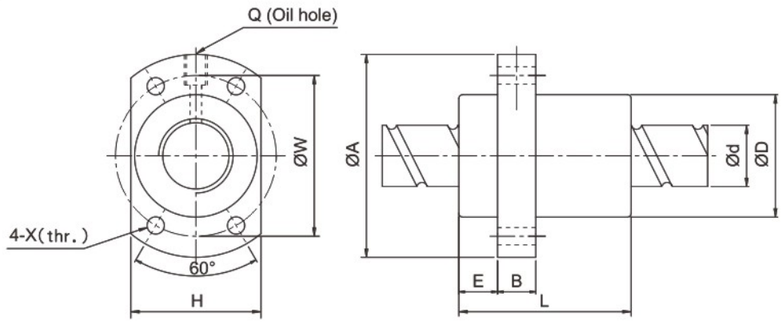

Unit : mm

Large Lead Model No.	d	I	Da	Dimension										Load Rating		K kgf/μm
				D	A	E	B	L	W	H	X	Q	n	Ca (kgf)	Coa (kgf)	
SFY01616-3.6	16	16	2.778	32	53	10.1	10	45	42	34	4.5	M6	1.8x2	1073	2551	31
SFY01616-5.6		16	2.778	32	53	10.1	10	61	42	34	4.5	M6	2.8x2	1568	3968	47
SFY02020-3.6	20	20	3.175	39	62	13	10	52	50	41	5.5	M6	1.8x2	1387	3515	37
SFY02020-5.6		20	3.175	39	62	13	10	72	50	41	5.5	M6	2.8x2	2029	5468	56
SFY02525-3.6	25	25	3.969	47	74	15	12	64	60	49	6.6	M6	1.8x2	2074	5494	45
SFY02525-5.6		25	3.969	47	74	15	12	89	60	49	6.6	M6	2.8x2	3032	8546	69
SFY03232-3.6	32	32	4.762	58	92	17	12	78	74	60	9	M6	1.8x2	3021	8690	58
SFY03232-5.6		32	4.762	58	92	17	12	110	74	60	9	M6	2.8x2	4417	13517	88
SFY04040-3.6	40	40	6.35	73	114	19.5	15	99	93	75	11	M6	1.8x2	4831	14062	70
SFY04040-5.6		40	6.35	73	114	19.5	15	139	93	75	11	M6	2.8x2	7065	21874	106
SFY05050-3.6	50	50	7.938	90	135	21.5	20	117	112	92	14	M6	1.8x2	7220	21974	86
SFY05050-5.6		50	7.938	90	135	21.5	20	167	112	92	14	M6	2.8x2	10558	34182	131

Twin Lead Model No.	d	I	Da	Dimension										Ca (kgf)	Coa (kgf)	K kgf/μm
				D	A	E	B	L	W	H	X	Q	n			
SFY01632-1.6	16	32	2.778	32	53	10.1	10	42.5	42	34	4.5	M6	0.8x2	493	1116	11
SFY01632-3.6		32	2.778	32	53	10.1	10	74.5	42	34	4.5	M6	1.8x2	989	2511	23
SFY02040-1.6	20	40	3.175	39	62	13	10	48	50	41	5.5	M6	0.8x2	653	1597	15
SFY02040-3.6		40	3.175	39	62	13	10	88	50	41	5.5	M6	1.8x2	1311	3592	30
SFY02550-1.6	25	50	3.969	47	74	15	12	58	60	49	6.6	M6	0.8x2	976	2495	19
SFY02550-3.6		50	3.969	47	74	15	12	108	60	49	6.6	M6	1.8x2	1960	5614	32
SFY03264-1.6	32	64	4.762	58	92	17	12	71	74	60	9	M6	0.8x2	1374	3571	22
SFY03264-3.6		64	4.762	58	92	17	12	135	74	60	9	M6	1.8x2	2759	8441	46
SFY04080-1.6	40	80	6.35	73	114	19.5	15	90	93	75	11	M6	0.8x2	2273	6387	29
SFY04080-3.6		80	6.35	73	114	19.5	15	170	93	75	11	M6	1.8x2	4566	14370	50
SFY050100-1.6	50	100	7.938	90	135	21.5	20	111	112	92	14	M6	0.8x2	3398	9980	35
SFY050100-3.6		100	7.938	90	135	21.5	20	211	112	92	14	M6	1.8x2	6824	22455	72

精密研磨級滚珠螺桿系列
Precision Ground Ball Screw Series
DFS (DIN 69051 FORM B) Series Specifications

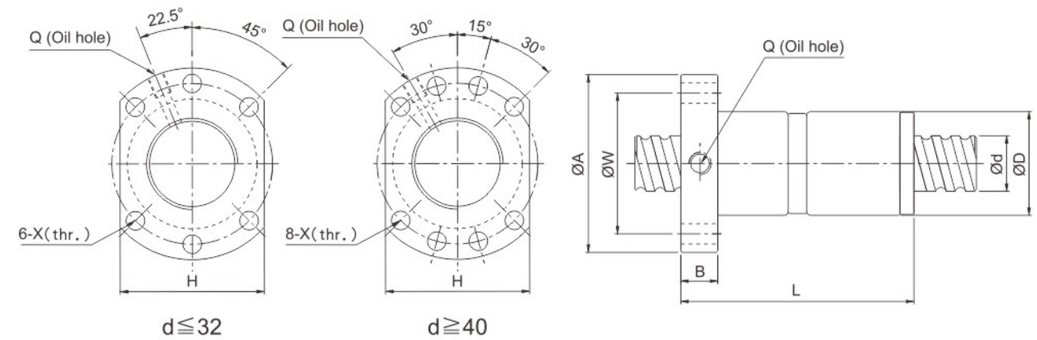

Unit : mm

Model No.	d	I	Da	Dimension									Load Rating		K kgf/μm
				D	A	B	L	W	H	X	Q	n	Ca (kgf)	Coa (kgf)	
DFS01605-3.8	15	5	2.778	28	48	10	73	38	40	5.5	M6	3.8x1	1112	2507	41
DFS01610-2.8		10	2.778	28	48	10	97	38	40	5.5	M6	2.8x1	839	1821	31
DFS02005-3.8	20	5	3.175	36	58	10	75	47	44	6.6	M6	3.8x1	1484	3681	50
DFS02010-3.8		10	3.175	36	58	10	120	47	44	6.6	M6	3.8x1	1516	3833	53
DFS02505-3.8	25	5	3.175	40	62	10	75	51	48	6.6	M6	3.8x1	1650	4658	59
DFS02510-3.8		10	3.175	40	62	12	122	51	48	6.6	M6	3.8x1	1638	4633	61
DFS03205-3.8	32	5	3.175	50	80	12	82	65	62	9	M6	3.8x1	1839	6026	71
DFS03210-3.8	31	10	3.969	50	80	13	122	65	62	9	M6	3.8x1	2460	7255	75
DFS03220-2.8		20	3.969	50	80	12	160	65	62	9	M6	2.8x1	1907	5482	58
DFS04005-3.8	40	5	3.175	63	93	15	85	78	70	9	M8	3.8x1	2018	7589	83
DFS04010-3.8	38	10	6.35	63	93	14	123	78	70	9	M8	3.8x1	5035	13943	91
DFS04020-2.8		20	6.35	63	93	14	162	78	70	9	M8	2.8x1	3959	10715	73
DFS05005-3.8	50	5	3.175	75	110	15	85	93	85	11	M8	3.8x1	2207	9542	96
DFS05010-3.8	48	10	6.35	75	110	18	138	93	85	11	M8	3.8x1	5638	17852	109
DFS05020-3.8		20	6.35	75	110	18	218	93	85	11	M8	3.8x1	5749	18485	116

Note : For double ball screw nut order, please contact in advance.

BALL SCREW
标准型滚珠丝杆

精密研磨級滚珠螺桿系列
Precision Ground Ball Screw Series
SCNI/SCI Series Specifications

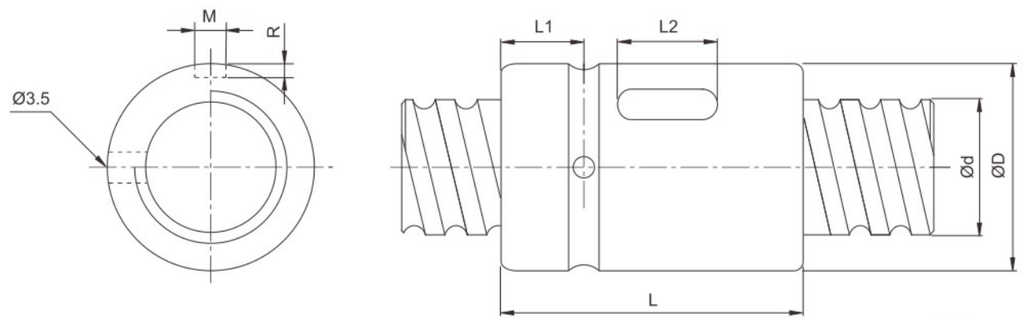

Unit : mm

Model No.	d	I	Da	Dimension							Load Rating		K kgf/μm
				D	L	L1	L2	M	R	n	Ca (kgf)	Coa (kgf)	
SCNI 01605-4	16	5	3.175	30	45	9	20	5	3	1x4	1380	3052	33
SCNI 02005-4	20	5	3.175	34	45	9	20	5	3	1x4	1551	3875	39
SCNI 02505-4	25	5	3.175	40	45	9	20	5	3	1x4	1724	4904	45
SCNI 02510-4		10	4.762	46	85	13	30	5	3	1x4	2954	7295	51
SCNI 03205-4	32	5	3.175	46	45	9	20	5	3	1x4	1922	6343	52
SCNI 03210-4		10	6.35	54	85	13	30	5	3	1x4	4805	12208	62
SCNI 04005-4	40	5	3.175	56	45	9	20	5	3	1x4	2110	7988	59
SCNI 04010-4		10	6.35	62	85	13	30	5	3	1x4	5399	15500	72
SCNI 05010-4	50	10	6.35	72	85	13	30	5	3	1x4	6004	19614	83
SCNI 06310-4	63	10	6.35	85	85	13	30	6	3.5	1x4	6719	25358	95
SCNI 08010-4	80	10	6.35	105	85	13	30	8	4.5	1x4	7346	31953	109
SCI 01604-4	16	4	2.381	30	40	9	15	3	1.5	1x4	973	2406	32
SCI 02004-4	20	4	2.381	34	40	9	15	3	1.5	1x4	1066	2987	37
SCI 02504-4	25	4	2.381	40	40	9	15	3	1.5	1x4	1180	3795	43
SCI 03204-4	32	4	2.381	46	40	9	15	3	1.5	1x4	1296	4838	49

精密研磨級滚珠螺桿系列
Precision Ground Ball Screw Series
SFK Series Specifications

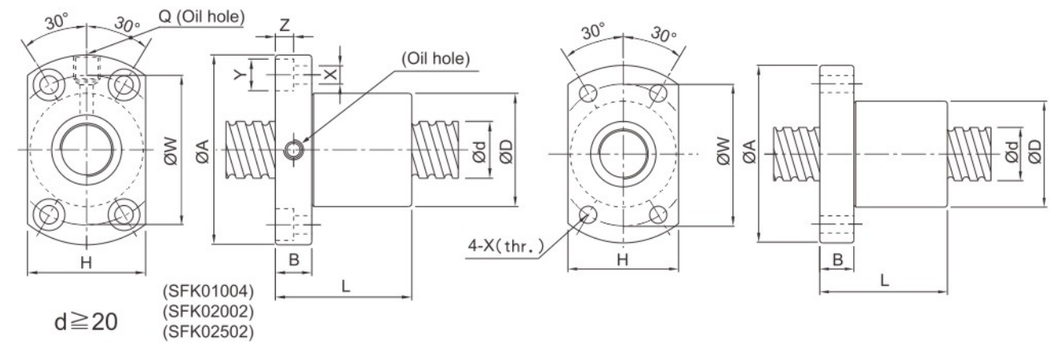

Unit : mm

Model No.	d	I	Da	Dimension											Ca (kgf)	Coa (kgf)	K kgf/μm
				D	A	B	L	W	H	X	Y	Z	Q	n			
SFK00401	4	1	0.8	10	20	3	12	15	14	2.9	-	-	-	1x2	64	97	5
SFK00601	6	1	0.8	12	24	3.5	15	18	16	3.4	-	-	-	1x3	111	224	9
SFK00801*	8	1	0.8	14	27	4	16	21	18	3.4	-	-	-	1x4	161	403	14
SFK00802*		2	1.2	14	27	4	16	21	18	3.4	-	-	-	1x3	222	458	13
SFK0082.5		2.5	1.2	16	29	4	26	23	20	3.4	-	-	-	1x3	221	457	13
SFK01002*	10	2	1.2	18	35	5	28	27	22	4.5	-	-	-	1x3	243	569	15
SFK01004		4	2	26	46	10	34	36	28	4.5	8	4.5	M6	1x3	468	905	17
SFK01202*	12	2	1.2	20	37	5	28	29	24	4.5	-	-	-	1x4	334	906	22
SFK01402*	14	2	1.2	21	40	6	23	31	26	5.5	-	-	-	1x4	354	1053	24
SFK01602*	16	2	1.2	25	43	10	40	35	29	5.5	-	-	M6	1x4	373	1200	26
SFK02002	20	2	1.2	50	80	15	55	65	68	6.5	10.5	6	M6	1x6	581	2284	48
SFK02502	25	2	1.2	50	80	13	43	65	68	6.5	10.5	6	M6	1x5	540	2381	46

03

Series

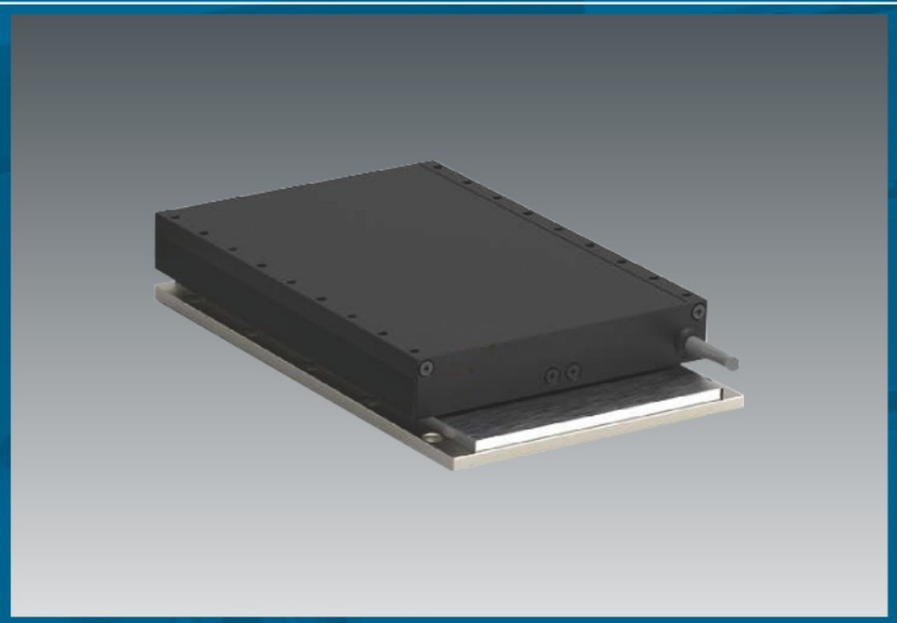

LINEAR MOTOR ACCESSORIES

直线电机动\定子

longzhichuang Co.,Ltd

Website: http://www.longzhi-chuang.com
Alibaba: https://longzhichuang.en.alibaba.com

PAGE.
19~32

LINEAR MOTOR ACCESSORIES
直线电机动\定子

LF SERIES

LF W50

- 超薄型有铁芯电机 / Ultra thin motor with iron core
- 高推力 / High thrust
- 高刚性 / High rigidity
- 低温升 / Low temperature rise
- 低齿槽效应 / Low alveolar effect

参数 SPECIFICATION

额定参数 Rated Specification		单位 Unit	L96	L176
连续推力	Continuous Force	N	52	103
峰值推力	Peak Force	N	208	412
静态力	Stall Force	N	36.8	73.1
额定损耗功率	RatedvOutput	W	38.2	76.4

电气参数 Physical Specification		单位 Unit		
连续电流	Continuous Current	Arms	2.2	4.4
峰值电流	Peak Current	Arms	8.8	16.8
静态电流	Stall Current	Arms	1.56	3.1
推力常数	Force Constant	N/Arms	23.6	23.6
反电动势常数	Back EMF Constant	Vrms/m/s	14.2	14.2
相间电阻（25℃）	Resistance Phase to Phase at 25℃	Ω	4	2
相间电感（25℃）	Inductance Phase to Phase at 25℃	mH	12	6
最大绕组温度	Continuous Current	℃	120	120

额定参数 Rated Specification		单位 Unit		
电气周期	Pole Pitch	mm	20	20
电磁吸力	Magnetic Attraction	N	349	717
动子重量	Mass	Kg	0.6	1

Notes:* 反电动势在电机按照恒定速度运行时,任意两根导线之间测定值。

LINEAR MOTOR ACCESSORIES
直线电机动\定子

LFC-W50尺寸安装图

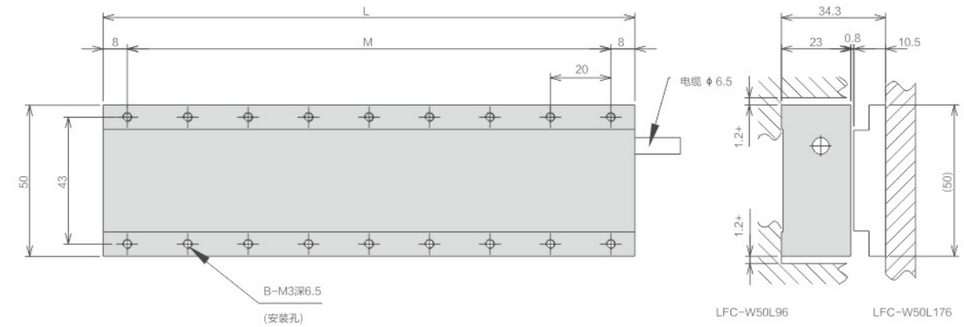

规格	代号	尺寸变化		
		L	M	B
LFC-W50L96	L96	96	80	10
LFC-W50L176	L176	176	160	18

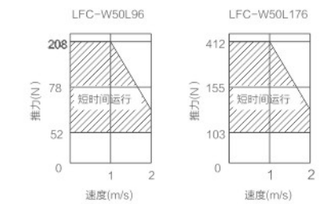

LFM-W50尺寸安装图

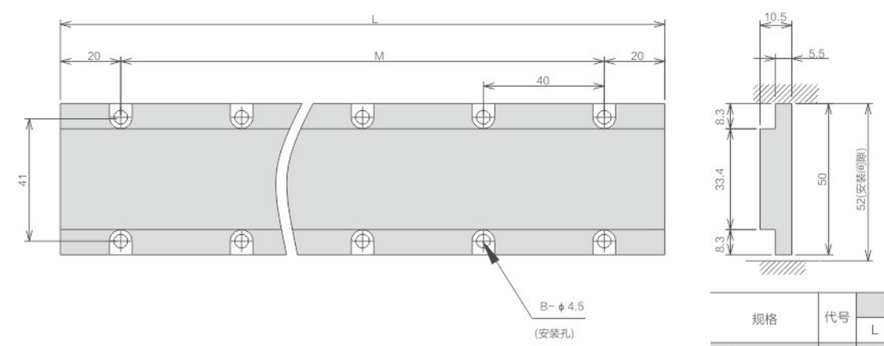

规格	代号	尺寸变化			质量
		L	M	B	KG
LFM-W50L80	D80	80	40	2	0.3
LFM-W50L200	D200	200	120	5	0.73
LFM-W50L400	D400	400	240	10	1.46

成套产品订购信息

平板电机	动子数量	动子代号	动子数量	动子代号	定子数量	定子代号	定子数量	定子代号	编码器	驱动器	特别配置
LF50	2	L96	2	L176	2	D80	3	D200	GA	N40	/X

编码器选择			
G	A	B	C
光栅	1um	0.5um	0.1um
M	A	B	C
磁栅	5um	2um	1um

驱动器选择		
品牌	代码	功率
松下	P	400W-5kw
日机	N	400W-5kw
高创	S	400W-5kw

说明

订购LF50平板电机，其中动子2个L96和L176；定子2个D80和3个D200；配套编码器为光栅反馈1um默认配套数量为4个；驱动器为日机功率400瓦，默认配套数量为4个。

LINEAR MOTOR ACCESSORIES
直线电机动\定子

LF SERIES

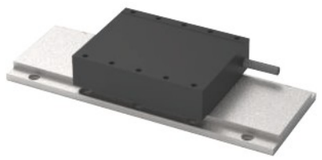

LF W75

- 超薄型有铁芯电机 / Ultra thin motor with iron core
- 高推力 / High thrust
- 高刚性 / High rigidity
- 低温升 / Low temperature rise
- 低齿槽效应 / Low alveolar effect

参数 SPECIFICATION

额定参数 Rated Specification		单位 Unit	L96	L176
连续推力	Continuous Force	N	89	178
峰值推力	Peak Force	N	356	712
静态力	Stall Force	N	63.2	125.6
额定损耗功率	RatedvOutput	W	56.4	112.7

电气参数 Physical Specification		单位 Unit		
连续电流	Continuous Current	Arms	2.2	4.4
峰值电流	Peak Current	Arms	8.8	16.8
静态电流	Stall Current	Arms	1.56	3.1
推力常数	Force Constant	N/Arms	40.5	40.5
反电动势常数	Back EMF Constant	Vrms/m/s	24.4	24.4
相间电阻（25℃）	Resistance Phase to Phase at 25℃	Ω	5.9	2.95
相间电感（25℃）	Inductance Phase to Phase at 25℃	mH	18.6	9.3
最大绕组温度	Continuous Current	℃	120	120

额定参数 Rated Specification		单位 Unit		
电气周期	Pole Pitch	mm	20	20
电磁吸力	Magnetic Attraction	N	600	1234
动子重量	Mass	Kg	0.8	1.5

Notes:* 反电动势在电机按照恒定速度运行时,任意两根导线之间测定值。

LINEAR MOTOR ACCESSORIES
直线电机动\定子

LFC-W75尺寸安装图

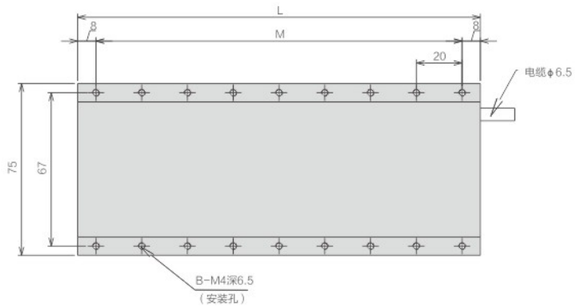

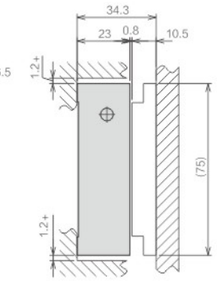

规格	代号	尺寸变化		
		L	M	B
LFC-W75L96	L96	96	80	10
LFC-W75L176	L176	176	160	18

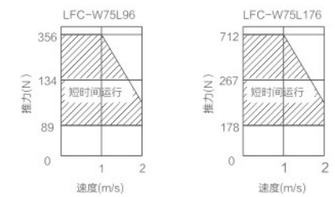

LFM-W75尺寸安装图

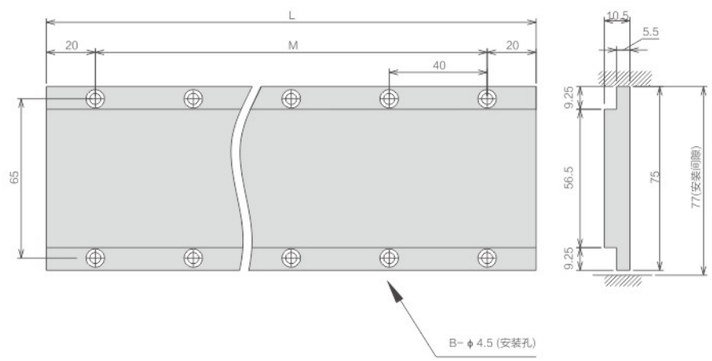

规格	代号	尺寸变化			质量
		L	M	B	KG
LFM-W75L80	D80	80	40	2	0.44
LFM-W75L200	D200	200	120	5	1.08
LFM-W75L400	D400	400	240	10	2.16

成套产品订购信息

平板电机	动子数量	动子代号	动子数量	动子代号	定子数量	定子代号	定子数量	定子代号	编码器	驱动器	特别配置
LF75	2	L96	2	L176	2	D80	3	D200	GA	N40	/X

编码器选择			
G	A	B	C
光栅	1um	0.5um	0.1um
M	A	B	C
磁栅	5um	2um	1um

驱动器选择		
品牌	代码	功率
松下	P	400W-5kw
日机	N	400W-5kw
高创	S	400W-5kw

说明

订购LF75平板电机，其中动子2个L96和L176；定子2个D80和3个D200；配套编码器为光栅反馈1um默认配套数量为4个；驱动器为日机功率400瓦，默认配套数量为4个。

LINEAR MOTOR ACCESSORIES
直线电机动\定子

LF SERIES

LF W100

- 超薄型有铁芯电机 / Ultra thin motor with iron core
- 高推力 / High thrust
- 高刚性 / High rigidity
- 低温升 / Low temperature rise
- 低齿槽效应 / Low alveolar effect

参数 SPECIFICATION

额定参数 Rated Specification		单位 Unit	L96	L176
连续推力	Continuous Force	N	133	256
峰值推力	Peak Force	N	532	1060
静态力	Stall Force	N	99.2	167.6
额定损耗功率	RatedvOutput	W	77.4	154.8

电气参数 Physical Specification		单位 Unit		
连续电流	Continuous Current	Arms	2.2	4.4
峰值电流	Peak Current	Arms	8.8	16.8
静态电流	Stall Current	Arms	1.56	3.1
推力常数	Force Constant	N/Arms	60.5	60.5
反电动势常数	Back EMF Constant	Vrms/m/s	36.4	36.4
相间电阻（25℃）	Resistance Phase to Phase at 25℃	Ω	8.1	4.05
相间电感（25℃）	Inductance Phase to Phase at 25℃	mH	26.3	13.1
最大绕组温度	Continuous Current	℃	120	120

额定参数 Rated Specification		单位 Unit		
电气周期	Pole Pitch	mm	20	20
电磁吸力	Magnetic Attraction	N	894	1839
动子重量	Mass	Kg	1.1	2.1

Notes:* 反电动势在电机按照恒定速度运行时,任意两根导线之间测定值。

LINEAR MOTOR ACCESSORIES
直线电机动\定子

LFC-W100尺寸安装图

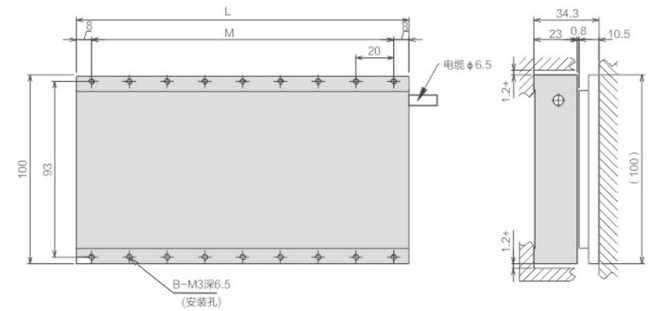

规格	代号	尺寸变化		
		L	M	B
LFC-W100L96	L96	96	80	10
LFC-W100L176	L176	176	160	18

LFM-W100尺寸安装图

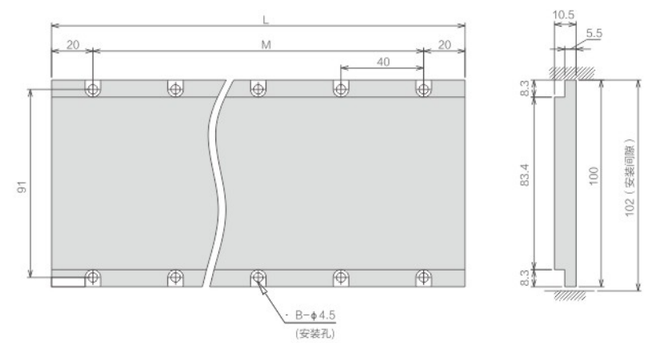

规格	代号	尺寸变化			质量
		L	M	B	KG
LFM-W100L80	D80	80	40	2	0.58
LFM-W100L200	D200	200	120	5	1.45
LFM-W100L400	D400	400	240	10	2.9

成套产品订购信息

平板电机	动子数量	动子代号	动子数量	动子代号	定子数量	定子代号	定子数量	定子代号	编码器	驱动器	特别配置
LF100	2	L96	2	L176	2	D80	3	D200	GA	N40	/X

编码器选择			
G	A	B	C
光栅	1um	0.5um	0.1um
M	A	B	C
磁栅	5um	2um	1um

驱动器选择		
品牌	代码	功率
松下	P	400W-5kw
日机	N	400W-5kw
高创	S	400W-5kw

说明

订购LF100平板电机，其中动子2个L96和L176；定子2个D80和3个D200；配套编码器为光栅反馈1um默认配套数量为4个；驱动器为日机功率400瓦，默认配套数量为4个。

LINEAR MOTOR ACCESSORIES
直线电机动\定子

LF SERIES

LF W125

- 超薄型有铁芯电机 / Ultra thin motor with iron core
- 高推力 / High thrust
- 高刚性 / High rigidity
- 低温升 / Low temperature rise
- 低齿槽效应 / Low alveolar effect

参数 SPECIFICATION

额定参数 Rated Specification		单位 Unit	L96	L176
连续推力	Continuous Force	N	170	340
峰值推力	Peak Force	N	680	1360
静态力	Stall Force	N	120.6	239.6
额定损耗功率	RatedvOutput	W	95.5	191.1

电气参数 Physical Specification		单位 Unit		
连续电流	Continuous Current	Arms	2.2	4.4
峰值电流	Peak Current	Arms	8.8	16.8
静态电流	Stall Current	Arms	1.56	3.1
推力常数	Force Constant	N/Arms	77.3	77.3
反电动势常数	Back EMF Constant	Vrms/m/s	46.5	46.5
相间电阻（25℃）	Resistance Phase to Phase at 25℃	Ω	10	5
相间电感（25℃）	Inductance Phase to Phase at 25℃	mH	32.6	16.3
最大绕组温度	Continuous Current	℃	120	120

额定参数 Rated Specification		单位 Unit		
电气周期	Pole Pitch	mm	20	20
电磁吸力	Magnetic Attraction	N	1145	2355
动子重量	Mass	Kg	1.3	2.6

Notes:* 反电动势在电机按照恒定速度运行时,任意两根导线之间测定值。

LFC-W125尺寸安装图

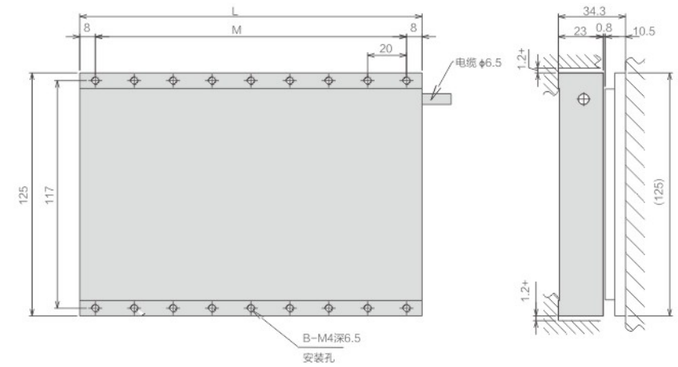

规格	代号	尺寸变化		
		L	M	B
LFC-W125L96	L96	96	80	10
LFC-W125L176	L176	176	160	18

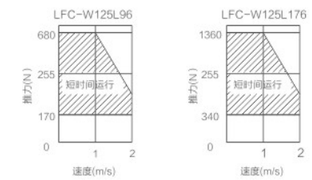

LFM-W125尺寸安装图

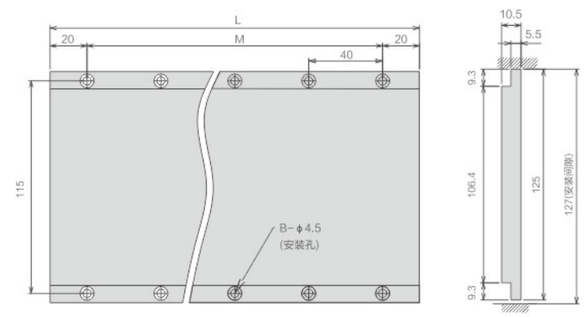

规格	代号	尺寸变化			质量
		L	M	B	KG
LFM-W125L80	D80	80	40	2	0.72
LFM-W125L200	D200	200	120	5	1.8
LFM-W125L400	D400	400	240	10	3.6

成套产品订购信息

平板电机	动子数量	动子代号	动子数量	动子代号	定子数量	定子代号	定子数量	定子代号	编码器	驱动器	特别配置
LF125	2	L96	2	L176	2	D80	3	D200	GA	N40	/X

编码器选择			
G	A	B	C
光栅	1um	0.5um	0.1um
M	A	B	C
磁栅	5um	2um	1um

驱动器选择		
品牌	代码	功率
松下	P	400W-5kw
日机	N	400W-5kw
高创	S	400W-5kw

说明

订购LF125平板电机，其中动子2个L96和L176；定子2个D80和3个D200；配套编码器为光栅反馈1um默认配套数量为4个；驱动器为日机功率400瓦，默认配套数量为4个。

LINEAR MOTOR ACCESSORIES
直线电机动\定子

LU SERIES

LU W85

- 超薄型有铁芯电机 / Ultra thin motor with iron core
- 高推力 / High thrust
- 高刚性 / High rigidity
- 低温升 / Low temperature rise
- 低齿槽效应 / Low alveolar effect

参数 SPECIFICATION

额定参数 Rated Specification		单位 Unit	L96	L150	L186	L276
连续推力	Continuous Force	N	31.6	47.4	63.2	94.8
峰值推力	Peak Force	N	126.4	189.6	252.8	379.2
静态力	Stall Force	N	22.4	33.6	44.8	67.3
额定损耗功率	RatedvOutput	W	33	50	66.5	99.8

电气参数 Physical Specification		单位 Unit				
连续电流	Continuous Current	Arms	2	2	2	2
峰值电流	Peak Current	Arms	8	8	8	8
静态电流	Stall Current	Arms	1.42	1.42	1.42	1.42
推力常数	Force Constant	N/Arms	15.8	23.7	31.6	47.4
反电动势常数	Back EMF Constant	Vrms/m/s	10.5	15.3	21	31.5
相间电阻（25℃）	Resistance Phase to Phase at 25℃	Ω	4.21	6.32	8.43	12.65
相间电感（25℃）	Inductance Phase to Phase at 25℃	mH	1.4	2.1	2.8	4.2
最大绕组温度	Continuous Current	℃				

额定参数 Rated Specification		单位 Unit				
电气周期	Pole Pitch	mm	36	36	36	36
电磁吸力	Magnetic Attraction	N				
动子重量	Mass	Kg	0.27	0.42	0.53	0.8

Notes:* 反电动势在电机按照恒定速度运行时,任意两根导线之间测定值。

LINEAR MOTOR ACCESSORIES
直线电机动\定子

LU SERIES

LU W85

- 超薄型有铁芯电机 / Ultra thin motor with iron core
- 高推力 / High thrust
- 高刚性 / High rigidity
- 低温升 / Low temperature rise
- 低齿槽效应 / Low alveolar effect

参数 SPECIFICATION

额定参数 Rated Specification		单位 Unit	L366	L438	L456
连续推力	Continuous Force	N	126.4	142.2	158
峰值推力	Peak Force	N	505.6	568.8	632
静态力	Stall Force	N	89.7	101	112
额定损耗功率	RatedvOutput	W	133.2	149.7	165.8

电气参数 Physical Specification		单位 Unit			
连续电流	Continuous Current	Arms	2	2	2
峰值电流	Peak Current	Arms	8	8	8
静态电流	Stall Current	Arms	1.42	1.42	1.42
推力常数	Force Constant	N/Arms	63.2	71.1	79
反电动势常数	Back EMF Constant	Vrms/m/s	42	45.9	52.5
相间电阻（25℃）	Resistance Phase to Phase at 25℃	Ω	16.87	18.96	21
相间电感（25℃）	Inductance Phase to Phase at 25℃	mH	5.6	6.3	7
最大绕组温度	Continuous Current	℃			

额定参数 Rated Specification		单位 Unit			
电气周期	Pole Pitch	mm	36	36	36
电磁吸力	Magnetic Attraction	N			
动子重量	Mass	Kg	1.03	1.22	1.27

Notes:* 反电动势在电机按照恒定速度运行时,任意两根导线之间测定值。

LINEAR MOTOR ACCESSORIES
直线电机动\定子

LUC-W85尺寸安装图

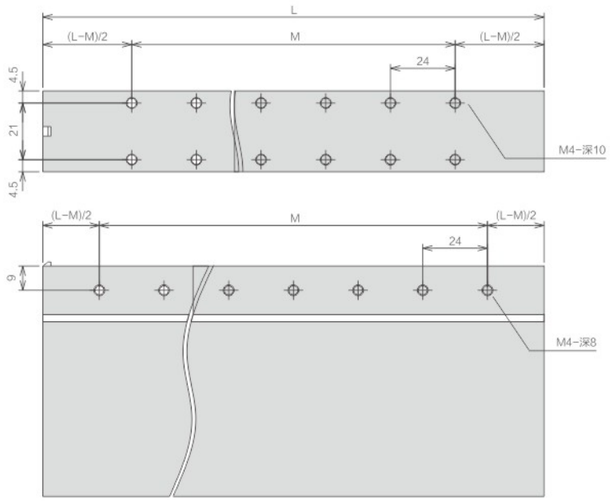

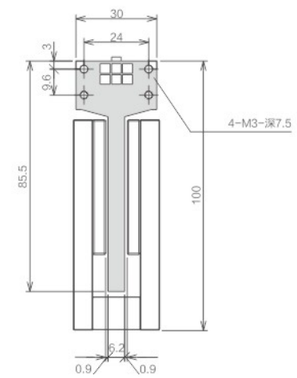

型 号	代号	尺寸变化		
		L	M	B
LUC-W85L96	L96	96	48	3
LUC-W85L150	L150	150	96	5
LUC-W85L186	L186	186	96	5
LUC-W85L276	L276	276	216	9
LUC-W85L366	L366	366	228	13
LUC-W85L438	L438	438	336	15
LUC-W85L456	L456	456	384	17

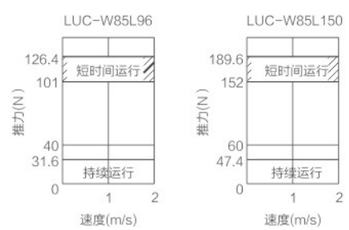

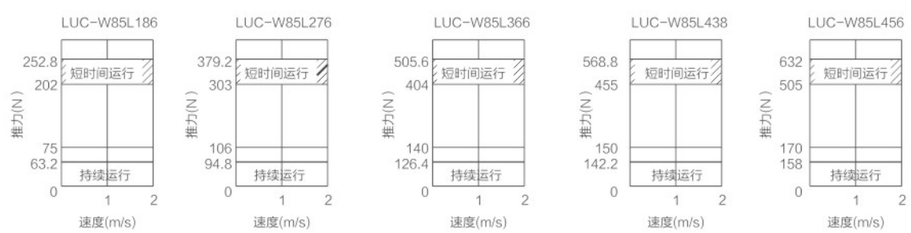

LINEAR MOTOR ACCESSORIES
直线电机动\定子

LUM-W85尺寸安装图

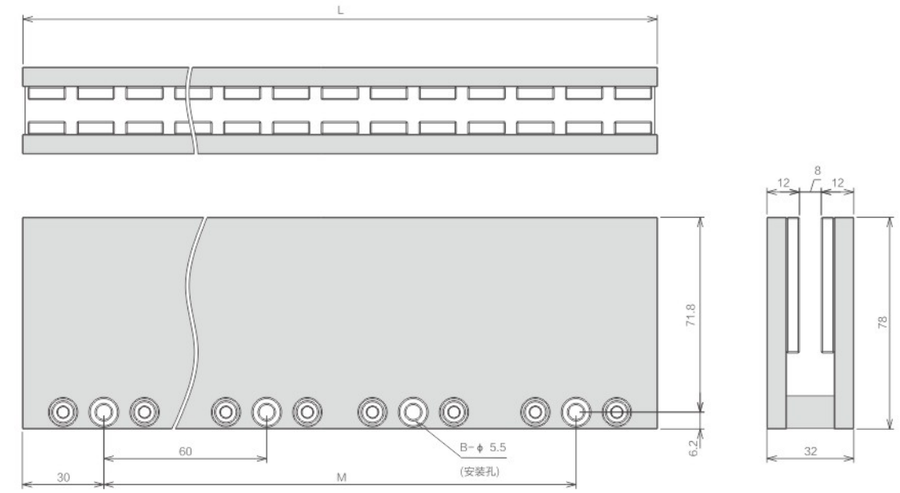

型 号	代号	尺寸变化			质量
		L	M	B	KG
LUM-W85L180	D180	180	120	3	2.3
LUM-W85L360	D360	360	300	6	4.6

成套产品订购信息

平板电机	动子数量	动子代号	动子数量	动子代号	定子数量	定子代号	定子数量	定子代号	编码器	驱动器	特别配置
LU85	2	L96	2	L150	2	D180	3	D360	GA	N40	/X

编码器选择			
G	A	B	C
光栅	1um	0.5um	0.1um
M	A	B	C
磁栅	5um	2um	1um

驱动器选择		
品牌	代码	功率
松下	P	400W-5kw
日机	N	400W-5kw
高创	S	400W-5kw

说明

订购LU85U型电机，其中动子2个L96和L176；定子2个D80和3个D200；配套编码器为光栅反馈1um默认配套数量为4个；驱动器为日机功率400瓦，默认配套数量为4个。

04

Series

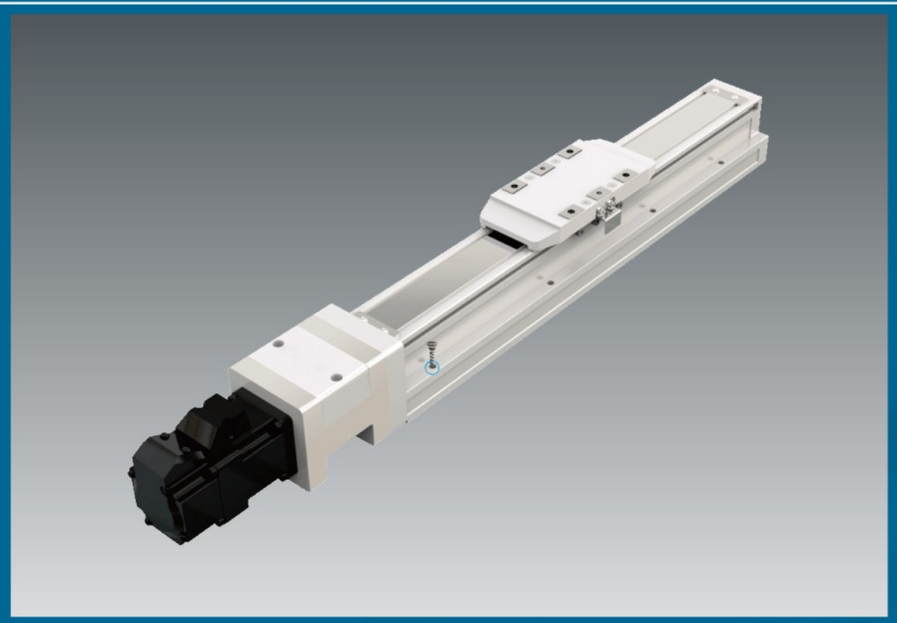

BALL SCREW MODULE

滚珠丝杆模组

longzhichuang Co.,Ltd

Website: http://www.longzhi-chuang.com
Alibaba: https://longzhichuang.en.alibaba.com

PAGE.
33~50

BALL SCREW MODULE
滚珠丝杆模组

LTH 4 单轴/1-axis

轨道内嵌 Built-in Guideway

螺杆驱动 Ball Screw Drive

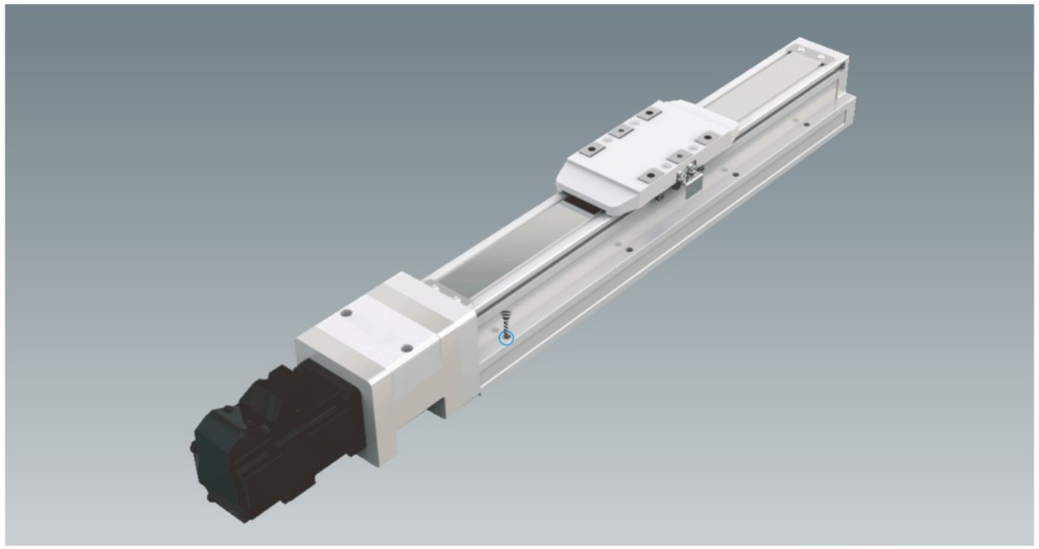

此圖僅供參考，出貨規格詳見尺寸圖面
The picture is just for the reference. Please check the the actual dimensions on the drawing.

最大行程 Maximum Stroke 500mm

最高速度 Maximum Speed 125mm/s

馬達容量 Motor Output 50W

滾珠螺桿 Ball Screw ⌀8mm

BC 馬達外露 Motor Exposed

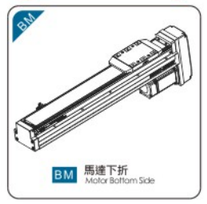

BM 馬達下折 Motor Bottom Side

BL 馬達左折 Motor Left Side

BR 馬達右折 Motor Right Side

型號表示方式 Ordering MBTHod

LTH4 - L1 - 100 - BC - M05B - C4 - 0001

本體型號 Model

■行程 Stroke

50-500mm
50間隔 50 mm Pitch

※行程50限定只能安裝2組光電。
Limitations while stroke is 50 only install 2 sets of optoelectronics.

■螺桿導程 Ball Screw Lead

01	1mm
2. 5	2.5mm

■馬達位置 Motor Position

BC	馬達外露 Motor Exposed
BM	馬達下折 Motor Bottom Side
BL	馬達左折 Motor Left Side
BR	馬達右折 Motor Right Side

■馬達廠牌、功率 Motor Brand、Power Output

M	三菱 Mitsubishi	05	50W	B
P	松下 Panasonic	10	-	
Y	安川 Yaskawa	20	-	
T	台達 Delta	40	-	

※若無煞車則不表示。※If No Brake,No Description.

■原點感應器 Home Sensor

外掛型 Out Side	
C	馬達側 Motor Side
D	反馬達側 OppoSite Motor Side
無 SENSOR No Sensor	
E	無 SENSOR No Sensor

※選擇行程50時，有以下限制
When the stroke is 50mm, the sensor installation has the following restrictions:
1. 無法選用C4;D4規格。
C4 & D4 will not be available for installation (order) option.
2. 原點與極限需放置於不同側。
Home sensor and limit sensor has to be installed on the different side of body.
3. 滑座左右兩側皆需安裝感應片。
Both sides of slider need to install the sensor trigger device.

■端點極限感應器 Limit Sensor

外掛型 Out Side	
3	1只 1 Pc
4	2只 2 Pc
無 SENSOR No Sensor	
5	無 SENSOR No Sensor

BALL SCREW MODULE
滚珠丝杆模组

基本仕樣 Specification

規格 Spec	位置重複精度 Repeatability (mm)		±0.01	
	螺桿導程 Ball Screw Lead (mm)		1	2.5
	最高速度 Maximum Speed (mm/s)		50	125
	最大可搬重量 Maximum Payload	水平使用 Horizontal (kg)	25	25
		垂直使用 Vertical (kg)	8	8
	定格推力 Rated Thrust (N)		849	339
	標準行程 Stroke Pitch (mm)		50-500mm/50間隔 50 mm Pitch	
部品 Parts	AC伺服馬達容量 AC Servo Motor Output (W)		50	
	滚珠螺桿外徑 Ball Screw Ø (mm)		C7Φ 8	
	連軸器 Coupling (mm)		7X8	
	原點感應器 Home Sensor	外掛 Outside	EE-SX674(NPN)	

※行程超過300時，會產生螺桿偏擺，此時請將速度調降。
When the stroke is over 300mm, the run-out of the ballscrew will occur.
We recommend to low down the working speed under this circumstances.
※馬達加減速設定0.2秒。
Acceleration and deacceleration value is set 0.2 second.

感應器接線圖<原點及端點> Sensor Layout

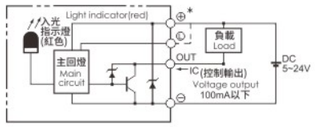

容許負載力距表 Allowable Overhang

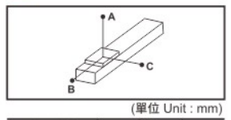

(單位 Unit : mm)

水平安裝 Horizontal Installation		A	B	C
導程 1 Lead	12kg	720	71	104
	18kg	430	44	66
	25kg	322	30	44
導程 2.5 Lead	15kg	550	47	69
	20kg	355	34	49
	25kg	255	25	37

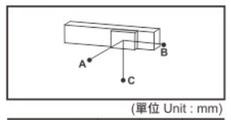

(單位 Unit : mm)

壁掛安裝 Wall Installation		A	B	C
導程 1 Lead	12kg	94	69	699
	18kg	56	44	411
	25kg	34	30	308
導程 2.5 Lead	15kg	58	47	521
	20kg	40	34	343
	25kg	28	25	245

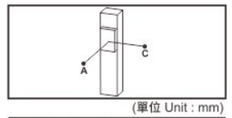

(單位 Unit : mm)

垂直安裝 Vertical Installation		A	C
導程 1 Lead	4kg	233	233
	8kg	118	118
	-	-	-
導程 2.5 Lead	4kg	205	205
	8kg	104	104
	-	-	-

靜態容許負載慣量 Static Loading Moment

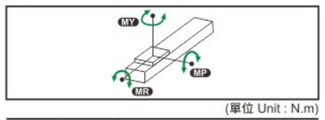

(單位 Unit : N.m)

MY	79
MP	79
MR	116

※力距表所表示的數據，代表重心。
The torque value in the chart indicate the center of gravity.
※符合型錄規範的正常使用下，保證壽命為10000公里。
Operation life is 10,000km when the product is using under the specified conditions.
※倒吊使用無法套用標準規範，如有需求請洽詢我司業務。
Data information is not for ceiling-mount inverse use. Contact us for the details if you want to apply ceiling-mount inverse usage.

搭配伺服馬達一覽表 Suitable Motor Brand

廠牌 Brand	馬達記號 Mark	煞車有無 Brake	馬達容量 Watt	電源電壓 AC-Voltage	伺服馬達型號 Motor Model	驅動器型號 Driver Model
三菱 Mitsubishi	M	無煞車(水平仕樣) No Brake (Horizontal Type)	50	220	HG-KR053	MR-J4-10A
		有煞車(垂直仕樣) With Brake (Vertical Type)	50	220	HG-KR053B	MR-J4-10A
松下 Panasonic	P	無煞車(水平仕樣) No Brake (Horizontal Type)	50	220	MSMD5A2G1U	MADHT1505
		有煞車(垂直仕樣) With Brake (Vertical Type)	50	220	MSMD5A2G1V	MADHT1505
台達 Delta	T	無煞車(水平仕樣) No Brake (Horizontal Type)	50	220	ECMA-C1040FES	ASD-B20121-B
		有煞車(垂直仕樣) With Brake (Vertical Type)	50	220	ECMA-C1040FFS	ASD-B20121-B

BALL SCREW MODULE
滚珠丝杆模组

LTH 4 单轴/1-axis

轨道内嵌 Built-in Guideway | 螺杆驱动 Ball Screw Drive

馬達外露/馬達下折
Motor Exposed / Motor Bottom Side

BC 馬達外露 Motor Exposed 2D CAD 3D CAD

單位 Unit : mm

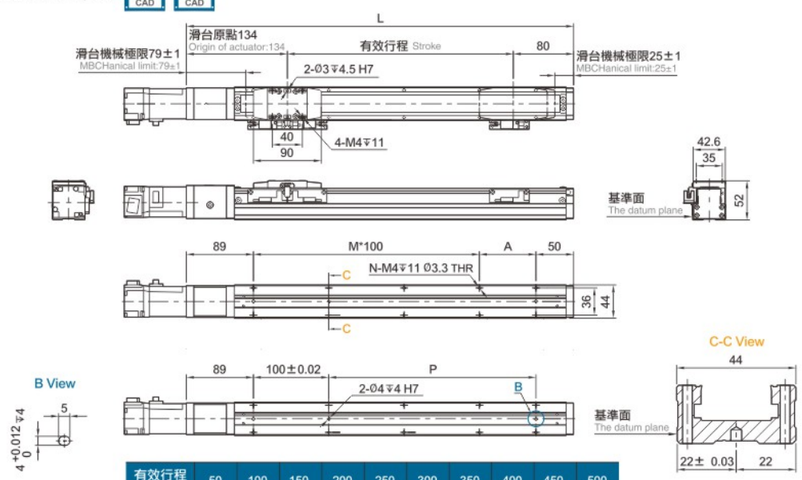

有效行程 stroke	50	100	150	200	250	300	350	400	450	500
L	264	314	364	414	464	514	564	614	664	714
A	25	75	25	75	25	75	25	75	25	75
M	1	1	2	2	3	3	4	4	5	5
N	6	6	8	8	10	10	12	12	14	14
P	25	75	125	175	225	275	325	375	425	475
KG	1.36	1.61	1.86	2.11	2.35	2.6	2.85	3. 1	3.34	3.59

BM 馬達下折 Motor Bottom Side 2D CAD 3D CAD

單位 Unit : mm

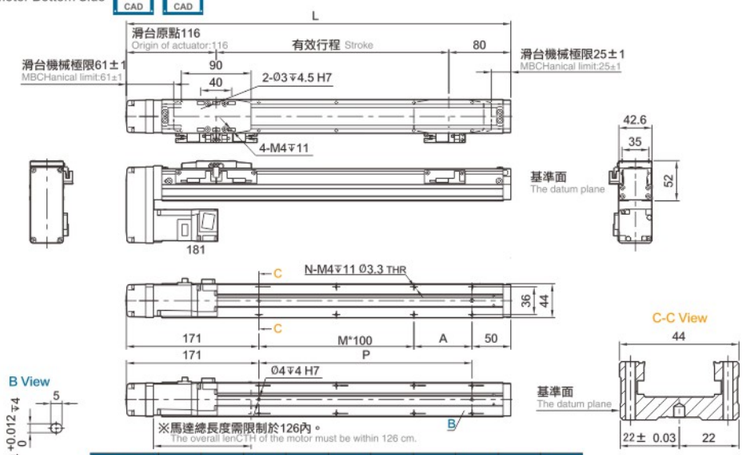

有效行程 stroke	50	100	150	200	250	300	350	400	450	500
L	246	296	346	396	446	496	546	596	646	696
A	25	75	25	75	25	75	25	75	25	75
M	0	0	1	1	2	2	3	3	4	4
N	4	4	6	6	8	8	10	10	12	12
P	25	75	125	175	225	275	325	375	425	475
KG	1.66	1.91	2.16	2.4	2.65	2.9	3.14	3.39	3.64	3.89

※馬達下折時，若選用煞車馬達，或是超出馬達總長度限制時無法套用標準PIN孔，如有需求請洽我司業務。
When motor with brake assembled on lower side, or the total lenCTH over than spec limit, it may not use standard pinhole.
Please contact our sales department if you need more information & requirement.

BALL SCREW MODULE
滚珠丝杆模组

LTH 4 单轴/1-axis

轨道内嵌 Built-in Guideway | 螺杆驱动 Ball Screw Drive

馬達左折/馬達右折
Motor Left Side / Motor Right Side

BL 馬達左折 Motor Left Side 2D CAD 3D CAD

單位 Unit : mm

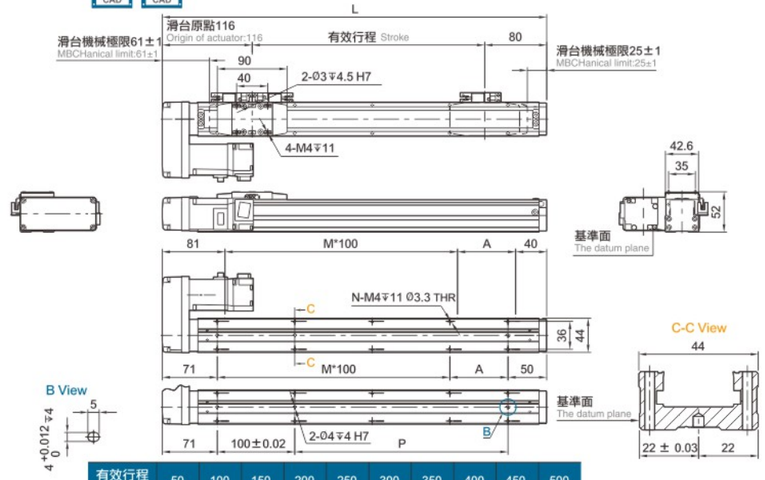

有效行程 stroke	50	100	150	200	250	300	350	400	450	500
L	246	296	346	396	446	496	546	596	646	696
A	25	75	25	75	25	75	25	75	25	75
M	1	1	2	2	3	3	4	4	5	5
N	6	6	8	8	10	10	12	12	14	14
P	25	75	125	175	225	275	325	375	425	475
KG	1.66	1.91	2.16	2.4	2.65	2.9	3.14	3.39	3.64	3.89

BR 馬達右折 Motor Right Side 2D CAD 3D CAD

單位 Unit : mm

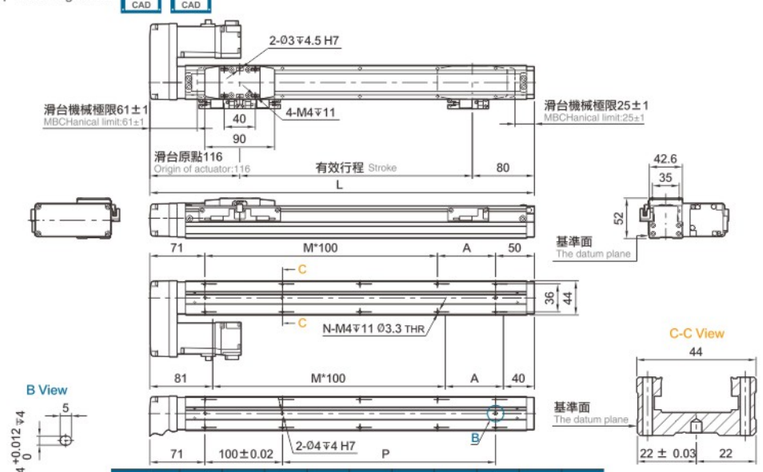

有效行程 stroke	50	100	150	200	250	300	350	400	450	500
L	246	296	346	396	446	496	546	596	646	696
A	25	75	25	75	25	75	25	75	25	75
M	1	1	2	2	3	3	4	4	5	5
N	6	6	8	8	10	10	12	12	14	14
P	25	75	125	175	225	275	325	375	425	475
KG	1.66	1.91	2.16	2.4	2.65	2.9	3.14	3.39	3.64	3.89

BALL SCREW MODULE
滚珠丝杆模组

LTH 5 单轴/1-axis

轨道内嵌
Built-in Guideway

螺杆驱动
Ball Screw Drive

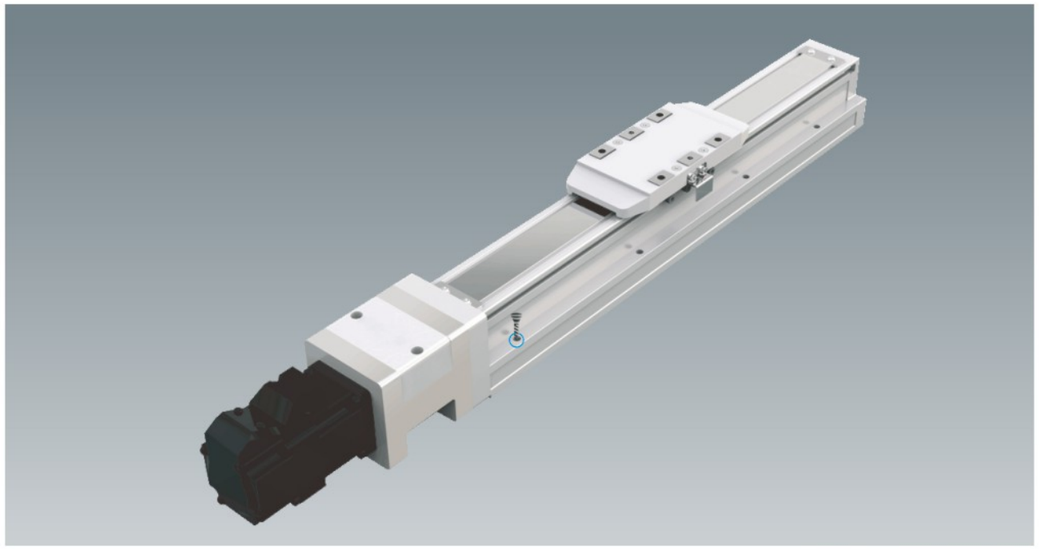

此圖僅供參考，出貨規格詳見尺寸圖面
The picture is just for the reference. Please check the the actual dimensions on the drawing.

最大行程 Maximum Stroke 800mm

BC 馬達外露 Motor Exposed

最高速度 Maximum Speed 1000mm/s

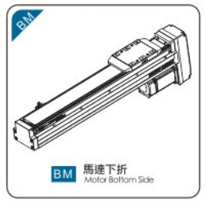

BM 馬達下折 Motor Bottom Side

馬達容量 Motor Output 100W

BL 馬達左折 Motor Left Side

滾珠螺桿 Ball Screw ⌀12mm

BR 馬達右折 Motor Right Side

型號表示方式 Ordering MBTHod

LTH5 - L5 - 100 - BC - M10B - C 4 - 0001

本體型號 Model

特注式樣 Special Order No.

■行程 Stroke

50-800mm
50間隔 50 mm Pitch

※行程50限定只能安裝2組光電。
Limitations while stroke is 50 only install 2 sets of optoelectronics.

■螺桿導程 Ball Screw Lead

05	5mm
10	10mm
20	20mm

■馬達位置 Motor Position

BC	馬達外露 Motor Exposed
BM	馬達下折 Motor Bottom Side
BL	馬達左折 Motor Left Side
BR	馬達右折 Motor Right Side

■馬達廠牌、功率 Motor Brand、Power Output

M	三菱 Mitsubishi	05	-	B
P	松下 Panasonic	10	100W	
Y	安川 Yaskawa	20	-	
T	台達 Delta	40	-	

※若無煞車則不表示。※If No Brake,No Description.
※步進電機請詢銷售

■原點感應器 Home Sensor

外掛型 Out Side	
C	馬達側 Motor Side
D	反馬達側 OppoSite Motor Side
無 SENSOR No Sensor	
E	無 SENSOR No Sensor

※選擇行程50時，有以下限制
When the stroke is 50mm, the sensor installation has the following restrictions:
1. 無法選用C4;D4規格。
C4 & D4 will not be available for installation (order) option.
2. 原點與極限需放置於不同側。
Home sensor and limit sensor has to be installed on the differentside of body.
3. 滑座左右兩側皆需安裝感應片。
Both sides of slider need to install the sensor trigger device.

■端點極限感應器 Limit Sensor

外掛型 Out Side	
3	1只 1 Pc
4	2只 2 Pc
無 SENSOR No Sensor	
5	無 SENSOR No Sensor

BALL SCREW MODULE
滚珠丝杆模组

基本仕樣 Specification

規格 Spec	位置重複精度 Repeatability (mm)		±0.01		
	螺桿導程 Ball Screw Lead (mm)		5	10	20
	最高速度 Maximum Speed (mm/s)		250	500	1000
	最大可搬重量 Maximum Payload	水平使用 Horizontal (kg)	30	15	10
		垂直使用 Vertical (kg)	10	5	2.5
	定格推力 Rated Thrust (N)		341	170	85
	標準行程 Stroke Pitch (mm)		50-800mm/50間隔 50 mm Pitch		
部品 Parts	AC伺服馬達容量 AC Servo Motor Output (W)		100		
	滚珠螺桿外徑 Ball Screw Ø (mm)		C7 Φ 12		
	連軸器 Coupling (mm)		7X8		
	原點感應器 Home Sensor	外掛 Outside	EE-SX674(NPN)		

※行程超過300時，會產生螺桿偏擺，此時請將速度調降。
When the stroke is over 300mm, the run-out of the ballscrew will occur.
We recommend to low down the working speed under this circumstances.
※馬達加減速設定0.2秒。
Acceleration and deacceleration value is set 0.2 second.

感應器接線圖<原點及端點> Sensor Layout

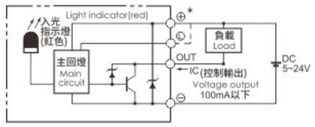

容許負載力距表 Allowable Overhang

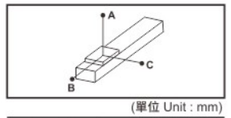

(單位 Unit : mm)

水平安裝 Horizontal Installation		A	B	C
導程 5 Lead	10kg	650	75	100
	20kg	440	32	45
	30kg	270	19	25
導程 10 Lead	5kg	600	145	185
	10kg	370	70	85
	15kg	250	42	52
導程 20 Lead	5kg	320	120	130
	8kg	220	70	80
	10kg	175	55	60

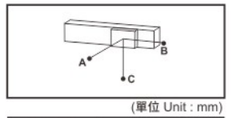

(單位 Unit : mm)

壁掛安裝 Wall installation		A	B	C
導程 5 Lead	10kg	100	75	650
	20kg	45	32	420
	30kg	25	19	260
導程 10 Lead	5kg	180	145	600
	10kg	85	68	370
	15kg	52	42	250
導程 20 Lead	5kg	130	120	320
	8kg	75	70	220
	10kg	60	55	170

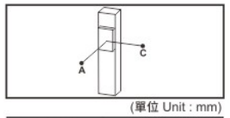

(單位 Unit : mm)

垂直安裝 Vertical Installation		A	C
導程 5 Lead	6kg	145	145
	8kg	110	110
	10kg	90	90
導程 10 Lead	1kg	800	800
	3kg	260	260
	5kg	155	155
導程 20 Lead	1kg	600	600
	2kg	300	
	2.5kg	250	250

靜態容許負載慣量 Static Loading Moment

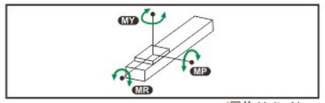

(單位 Unit : N.m

MY	103
MP	103
MR	144

※力距表所表示的數據，代表重心。
The torque value in the chart indicate the center of gravity.
※符合型錄規範的正常使用下，保證壽命為10000公里。
Operation life is 10,000km when the product is using under the specified conditions.
※倒吊使用無法套用標準規範，如有需求請洽詢我司業務。
Data information is not for ceiling-mount inverse use. Contact us for the details if you want to apply ceiling-mount inverse usage.

搭配伺服馬達一覽表 Suitable Motor Brand

廠牌 Brand	馬達記號 Mark	煞車有無 Brake	馬達容量 Watt	電源電壓 AC-Voltage	伺服馬達型號 Motor Model	驅動器型號 Driver Model
三菱 Mitsubishi	M	無煞車(水平仕樣) No Brake (Horizontal Type)	100	220	HG-KR13	MR-J4-10A
		有煞車(垂直仕樣) With Brake (Vertical Type)	100	220	HG-KR13B	MR-J4-10A
松下 Panasonic	P	無煞車(水平仕樣) No Brake (Horizontal Type)	100	220	MSMD012G1U	MADHT1505
		有煞車(垂直仕樣) With Brake (Vertical Type)	100	220	MSMD012G1V	MADHT1505
台達 Delta	T	無煞車(水平仕樣) No Brake (Horizontal Type)	100	220	ECMA-C20401ES	ASD-B20121-B
		有煞車(垂直仕樣) With Brake (Vertical Type)	100	220	ECMA-C20401FS	ASD-B20121-B

BALL SCREW MODULE
滚珠丝杆模组

LTH 5 单轴/1-axis

轨道内嵌
Built-in Guideway

螺杆驱动
Ball Screw Drive

馬達外露/馬達下折
Motor Exposed / Motor Bottom Side

BC 馬達外露 Motor Exposed 2D CAD 3D CAD

單位 Unit : mm

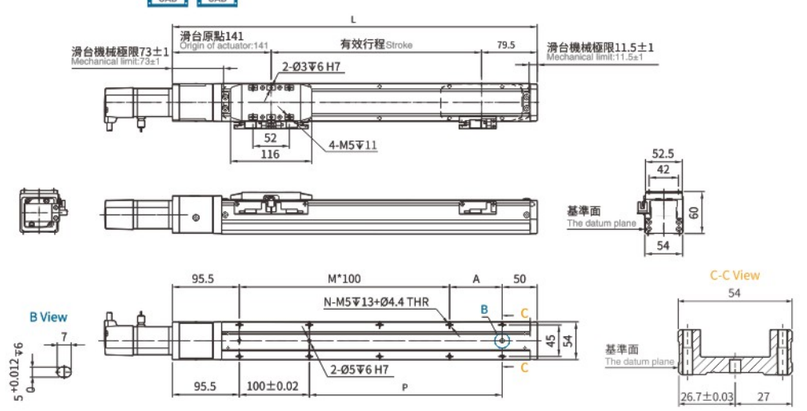

有效行程 Stroke	50	100	150	200	250	300	350	400	450	500	550	600	650	700	750	800
L	270.5	320.5	370.5	420.5	470.5	520.5	570.5	620.5	670.5	720.5	770.5	820.5	870.5	920.5	970.5	1020.5
A	25	75	25	75	25	75	25	75	25	75	25	75	25	75	25	75
M	1	1	2	2	3	3	4	4	5	5	6	6	7	7	8	8
N	6	6	8	8	10	10	12	12	14	14	16	16	18	18	20	20
P	25	75	125	175	225	275	325	375	425	475	525	575	625	675	725	775
KG	1.65	1.79	1.92	2.11	2.39	2.50	2.52	2.75	2.86	2.95	3.15	3.28	3.44	3.58	3.71	4.09

BM 馬達下折 Motor Bottom Side 2D CAD 3D CAD

單位 Unit : mm

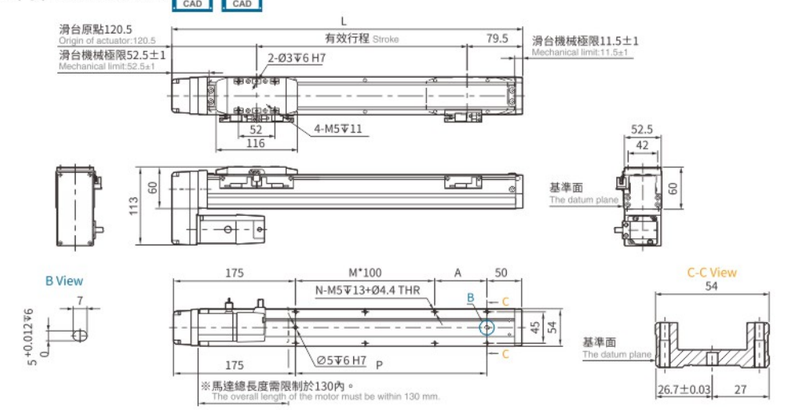

有效行程 Stroke	50	100	150	200	250	300	350	400	450	500	550	600	650	700	750	800
L	250	300	350	400	450	500	550	600	650	700	750	800	850	900	950	1000
A	25	75	25	75	25	75	25	75	25	75	25	75	25	75	25	75
M	0	0	1	1	2	2	3	3	4	4	5	5	6	6	7	7
N	4	4	6	6	8	8	10	10	12	12	14	14	16	16	18	18
P	25	75	125	175	225	275	325	375	425	475	525	575	625	675	725	775
KG	1.68	1.80	2.03	2.14	2.42	2.53	2.58	2.78	2.89	2.98	3.18	3.31	3.47	3.60	3.74	4.12

※馬達下折時，若選用煞車馬達，或是超出馬達總長度限制時無法套用標準PIN孔，如有需求請洽我司業務。
When motor with brake assembled on lower side, or the total length over than spec limit, it may not use standard pinhole. Please contact our sales department if you need more information & requirement.

BALL SCREW MODULE
滚珠丝杆模组

LTH 5 单轴/1-axis

轨道内嵌
Built-in Guideway

螺杆驱动
Ball Screw Drive

馬達左折/馬達右折
Motor Left Side / Motor Right Side

BL 馬達左折 Motor Left Side 2D CAD 3D CAD

單位 Unit : mm

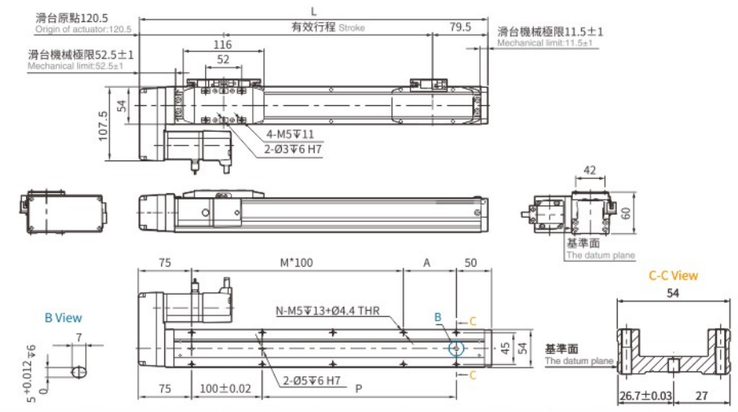

有效行程 Stroke	50	100	150	200	250	300	350	400	450	500	550	600	650	700	750	800
L	250	300	350	400	450	500	550	600	650	700	750	800	850	900	950	1000
A	25	75	25	75	25	75	25	75	25	75	25	75	25	75	25	75
M	1	1	2	2	3	3	4	4	5	5	6	6	7	7	8	8
N	6	6	8	8	10	10	12	12	14	14	16	16	18	18	20	20
P	25	75	125	175	225	275	325	375	425	475	525	575	625	675	725	775
KG	1.68	1.80	2.03	2.14	2.42	2.53	2.58	2.78	2.89	2.98	3.18	3.31	3.47	3.60	3.74	4.12

BR 馬達右折 Motor Right Side 2D CAD 3D CAD

單位 Unit : mm

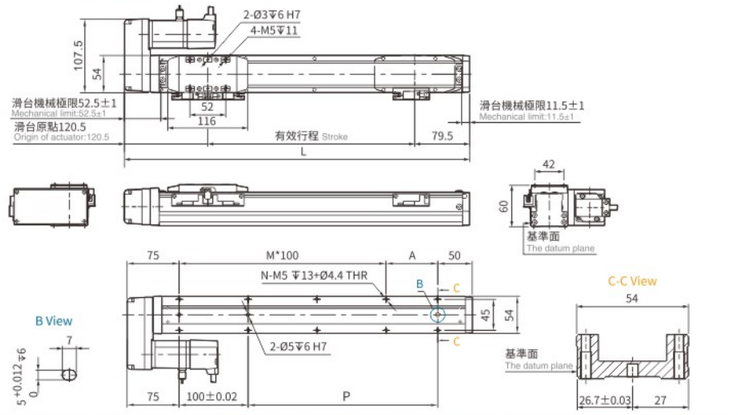

有效行程 Stroke	50	100	150	200	250	300	350	400	450	500	550	600	650	700	750	800
L	250	300	350	400	450	500	550	600	650	700	750	800	850	900	950	1000
A	25	75	25	75	25	75	25	75	25	75	25	75	25	75	25	75
M	1	1	2	2	3	3	4	4	5	5	6	6	7	7	8	8
N	6	6	8	8	10	10	12	12	14	14	16	16	18	18	20	20
P	25	75	125	175	225	275	325	375	425	475	525	575	625	675	725	775
KG	1.68	1.80	2.03	2.14	2.42	2.53	2.58	2.78	2.89	2.98	3.18	3.31	3.47	3.60	3.74	4.12

BALL SCREW MODULE
滚珠丝杆模组

LTH 8 单轴/1-axis

轨道内嵌 Built-in Guideway

螺杆驱动 Ball Screw Drive

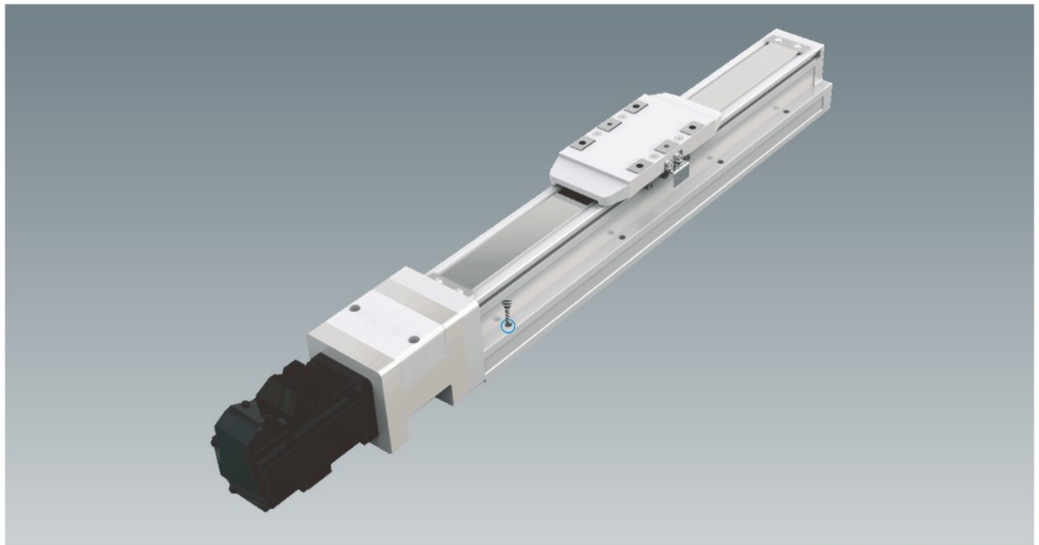

此圖僅供參考，出貨規格詳見尺寸圖面
The picture is just for the reference. Please check the the actual dimensions on the drawing.

最大行程 Maximum Stroke 1050mm

BC 馬達外露 Motor Exposed

最高速度 Maximum Speed 1000mm/s

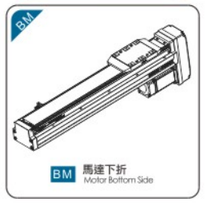

BM 馬達下折 Motor Bottom Side

馬達容量 Motor Output 200W

BL 馬達左折 Motor Left Side

滚珠螺桿 Ball Screw ⌀16mm

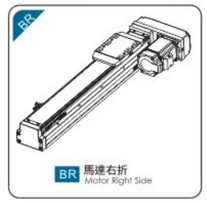

BR 馬達右折 Motor Right Side

型號表示方式 Ordering MBTHod

LTH8 - L10 - 100 - BC - M20B - C4 - 0001

本體型號 Model

特注式樣 Special Order No.

■行程 Stroke

50-1050mm
50間隔 50 mm Pitch

※行程50限定只能安裝2組光電。
Limitations while stroke is 50 only install 2 sets of optoelectronics.

■螺桿導程 Ball Screw Lead

05	5mm
10	10mm
20	20mm

■馬達位置 Motor Position

BC	馬達外露 Motor Exposed
BM	馬達下折 Motor Bottom Side
BL	馬達左折 Motor Left Side
BR	馬達右折 Motor Right Side

■馬達廠牌、功率 Motor Brand、Power Output

M	三菱 Mitsubishi	05	-	B
P	松下 Panasonic	10	-	
Y	安川 Yaskawa	20	200W	
T	台達 Delta	40	-	

※若無煞車則不表示。※If No Brake,No Description.
※步進電機請詢銷售

■原點感應器 Home Sensor

外掛型 Out Side	
C	馬達側 Motor Side
D	反馬達側 OppoSite Motor Side
無 SENSOR No Sensor	
E	無 SENSOR No Sensor

※選擇行程50時，有以下限制
When the stroke is 50mm, the sensor installation has the following restrictions:
1. 無法選用C4;D4規格。
C4 & D4 will not be available for installation (order) option.
2. 原點與極限需放置於不同側。
Home sensor and limit sensor has to be installed on the different side of body.
3. 滑座左右兩側皆需安裝感應片。
Both sides of slider need to install the sensor trigger device.

■端點極限感應器 Limit Sensor

外掛型 Out Side	
3	1只 1 Pc
4	2只 2 Pc
無 SENSOR No Sensor	
5	無 SENSOR No Sensor

基本仕樣 Specification

規格 Spec	位置重複精度 Repeatability (mm)		±0.01		
	螺桿導程 Ball Screw Lead (mm)		5	10	20
	最高速度 Maximum Speed (mm/s)		250	500	1000
	最大可搬重量 Maximum Payload	水平使用 Horizontal (kg)	50	30	12
		垂直使用 Vertical (kg)	15	8	2.5
	定格推力 Rated Thrust (N)		683	341	174
	標準行程 Stroke Pitch (mm)		50-1050mm/50間隔 50 mm Pitch		
部品 Parts	AC伺服馬達容量 AC Servo Motor Output (W)		200		
	滚珠螺桿外徑 Ball Screw Ø (mm)		C7Φ 16		
	連軸器 Coupling (mm)		10X14/11 (註1)		
	原點感應器 Home Sensor	外掛 Outside	EE-SX674(NPN)		

※行程超過750時，會產生螺桿偏擺，此時請將速度調降。
When the stroke is over 750mm, the run-out of the ballscrew will occur. We recommend to low down the working speed under this circumstances.
※馬達加減速設定0.2秒。
Acceleration and deacceleration value is set 0.2 second.
註1:使用Panasonic 200W馬達時，馬達軸心為11; 其他廠牌，馬達軸心為⌀14。
Motor (200W) Shaft Diameter: Panasonic: 11mm; Other: 14mm.

感應器接線圖<原點及端點> Sensor Layout

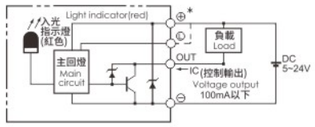

容許負載力距表 Allowable Overhang

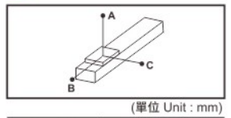

(單位 Unit : mm)

水平安裝 Horizontal Installation		A	B	C
導程5 Lead	20kg	1560	153	237
	35kg	890	81	126
	50kg	550	53	82
導程10 Lead	10kg	1730	286	412
	20kg	839	136	196
	30kg	541	86	124
導程20 Lead	6kg	1213	403	493
	9kg	800	264	323
	12kg	592	194	238

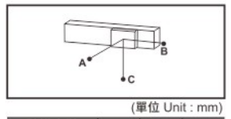

(單位 Unit : mm)

壁掛安裝 Wall Installation		A	B	C
導程5 Lead	20kg	214	153	1435
	35kg	113	81	845
	50kg	74	53	506
導程10 Lead	10kg	370	286	1400
	20kg	176	136	800
	30kg	112	86	495
導程20 Lead	6kg	444	403	760
	9kg	292	264	277
	12kg	214	194	544

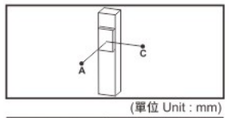

(單位 Unit : mm)

垂直安裝 Vertical Installation		A	C
導程5 Lead	10kg	331	331
	15kg	220	220
	-	-	-
導程10 Lead	5kg	589	589
	8kg	368	368
	-	-	-
導程20 Lead	2.5kg	935	935
	-	-	-
	-	-	-

靜態容許負載慣量 Static Loading Moment

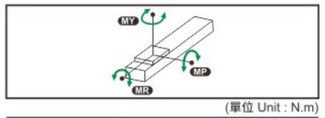

(單位 Unit : N.m)

MY	318
MP	318
MR	626

※力距表所表示的數據，代表重心。
The torque value in the chart indicate the center of gravity.
※符合型錄規範的正常使用下，保證壽命為10000公里。
Operation life is 10,000km when the product is using under the specified conditions.
※倒吊使用無法套用標準規範，如有需求請洽詢我司業務。
Data information is not for ceiling-mount inverse use. Contact us for the details if you want to apply ceiling-mount inverse usage.

搭配伺服馬達一覽表 Suitable Motor Brand

廠牌 Brand	馬達記號 Mark	煞車有無 Brake	馬達容量 Watt	電源電壓 AC-Voltage	伺服馬達型號 Motor Model	驅動器型號 Driver Model
三菱 Mitsubishi	M	無煞車(水平仕樣) No Brake (Horizontal Type)	200	220	HG-KR23	MR-J4-20A
		有煞車(垂直仕樣) With Brake (Vertical Type)	200	220	HG-KR23B	MR-J4-20A
松下 Panasonic	P	無煞車(水平仕樣) No Brake (Horizontal Type)	200	220	MHMD022G1U	MADHT1507
		有煞車(垂直仕樣) With Brake (Vertical Type)	200	220	MHMD022G1V	MADHT1507
台達 Delta	T	無煞車(水平仕樣) No Brake (Horizontal Type)	200	220	ECMA-C20602ES	ASD-B20221-B
		有煞車(垂直仕樣) With Brake (Vertical Type)	200	220	ECMA-C20602FS	ASD-B20221-B

BALL SCREW MODULE
滚珠丝杆模组

LTH 8 单轴/1-axis

轨道内嵌 Built-in Guideway

螺杆驱动 Ball Screw Drive

馬達外露/馬達下折
Motor Exposed / Motor Bottom Side

BC 馬達外露 Motor Exposed 2D CAD 3D CAD

單位 Unit : mm

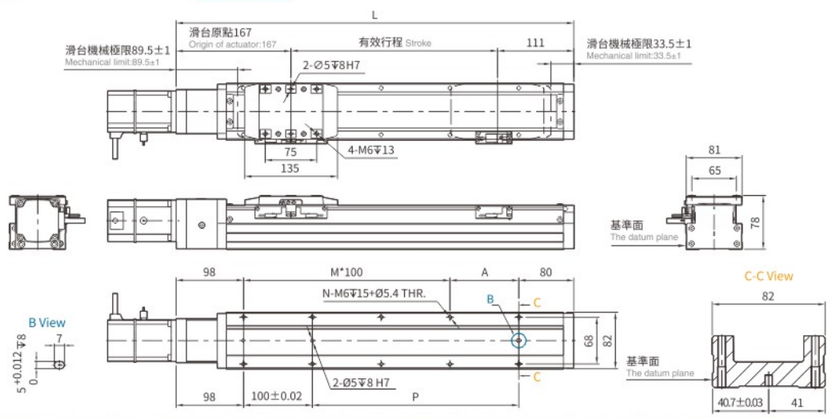

有效行程 Stroke	50	100	150	200	250	300	350	400	450	500	550	600	650	700	750	800	850	900	950	1000	1050	1100
L	328	378	428	478	528	578	628	678	728	778	828	878	928	978	1028	1078	1128	1178	1228	1278	1328	1378
A	50	100	50	100	50	100	50	100	50	100	50	100	50	100	50	100	50	100	50	100	50	100
M	1	1	2	2	3	3	4	4	5	5	6	6	7	7	8	8	9	9	10	10	11	11
N	6	6	8	8	10	10	12	12	14	14	16	16	18	18	20	20	22	22	24	24	26	26
P	50	100	150	200	250	300	350	400	450	500	550	600	650	700	750	800	850	900	950	1000	1050	1100
KG	3.91	4.29	4.70	5.00	5.35	5.68	6.00	6.35	6.64	6.97	7.41	7.71	8.12	8.41	8.65	8.96	9.37	9.62	10.01	10.28	10.70	11.12

BM 馬達下折 Motor Bottom Side 2D CAD 3D CAD

單位 Unit : mm

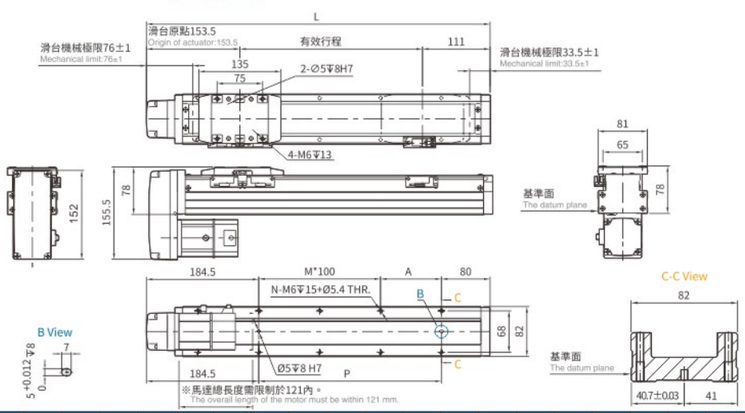

有效行程 Stroke	50	100	150	200	250	300	350	400	450	500	550	600	650	700	750	800	850	900	950	1000	1050	1100
L	314.5	364.5	414.5	464.5	514.5	564.5	614.5	664.5	714.5	764.5	814.5	864.5	914.5	964.5	1014.5	1064.5	1114.5	1164.5	1214.5	1264.5	1314.5	1364.5
A	50	100	50	100	50	100	50	100	50	100	50	100	50	100	50	100	50	100	50	100	50	100
M	0	0	1	1	2	2	3	3	4	4	5	5	6	6	7	7	8	8	9	9	10	10
N	4	4	6	6	8	8	10	10	12	12	14	14	16	16	18	18	20	20	22	22	24	24
P	50	100	150	200	250	300	350	400	450	500	550	600	650	700	750	800	850	900	950	1000	1050	1100
KG	3.95	4.33	4.74	5.09	5.39	5.72	6.04	6.39	6.68	7.01	7.45	7.75	8.16	8.45	8.69	9.00	9.41	9.66	10.08	10.32	10.74	11.16

※馬達下折時，若選用煞車馬達，或是超出馬達總長度限制時無法套用標準PIN孔，如有需求請洽我司業務。
When motor with brake assembled on lower side, or the total length over than spec limit, it may not use standard pinhole. Please contact our sales department if you need more information & requirement.

BALL SCREW MODULE
滚珠丝杆模组

LTH 8 单轴/1-axis

轨道内嵌 Built-in Guideway

螺杆驱动 Ball Screw Drive

馬達左折/馬達右折
Motor Left Side / Motor Right Side

BL 馬達左折 Motor Left Side 2D CAD 3D CAD

單位 Unit : mm

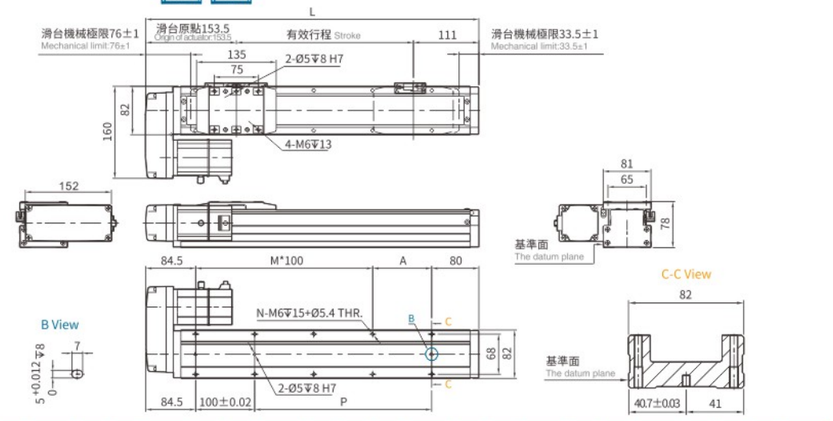

有效行程 Stroke	50	100	150	200	250	300	350	400	450	500	550	600	650	700	750	800	850	900	950	1000	1050	1100
L	314.5	364.5	414.5	464.5	514.5	564.5	614.5	664.5	714.5	764.5	814.5	864.5	914.5	964.5	1014.5	1064.5	1114.5	1164.5	1214.5	1264.5	1314.5	1364.5
A	50	100	50	100	50	100	50	100	50	100	50	100	50	100	50	100	50	100	50	100	50	100
M	1	1	2	2	3	3	4	4	5	5	6	6	7	7	8	8	9	9	10	10	11	11
N	6	6	8	8	10	10	12	12	14	14	16	16	18	18	20	20	22	22	24	24	26	26
P	50	100	150	200	250	300	350	400	450	500	550	600	650	700	750	800	850	900	950	1000	1050	1100
KG	3.95	4.33	4.74	5.09	5.39	5.72	6.04	6.39	6.68	7.01	7.45	7.75	8.16	8.45	8.69	9.00	9.41	9.66	10.08	10.32	10.74	11.16

BR 馬達右折 Motor Right Side 2D CAD 3D CAD

單位 Unit : mm

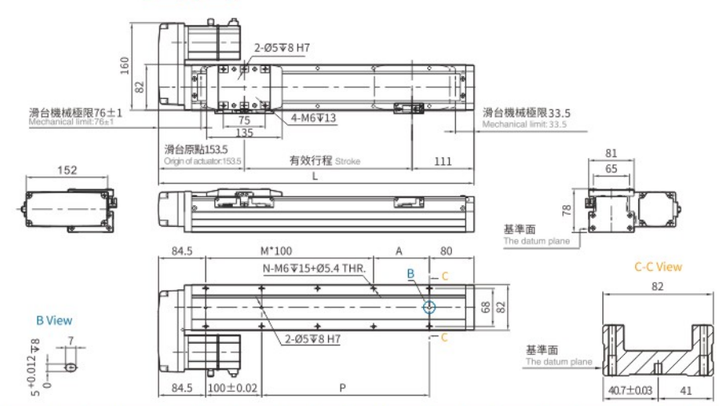

有效行程 Stroke	50	100	150	200	250	300	350	400	450	500	550	600	650	700	750	800	850	900	950	1000	1050	1100
L	314.5	364.5	414.5	464.5	514.5	564.5	614.5	664.5	714.5	764.5	814.5	864.5	914.5	964.5	1014.5	1064.5	1114.5	1164.5	1214.5	1264.5	1314.5	1364.5
A	50	100	50	100	50	100	50	100	50	100	50	100	50	100	50	100	50	100	50	100	50	100
M	1	1	2	2	3	3	4	4	5	5	6	6	7	7	8	8	9	9	10	10	11	11
N	6	6	8	8	10	10	12	12	14	14	16	16	18	18	20	20	22	22	24	24	26	26
P	50	100	150	200	250	300	350	400	450	500	550	600	650	700	750	800	850	900	950	1000	1050	1100
KG	3.95	4.33	4.74	5.09	5.39	5.72	6.04	6.39	6.68	7.01	7.45	7.75	8.16	8.45	8.69	9.00	9.41	9.66	10.08	10.32	10.74	11.16

BALL SCREW MODULE
滚珠丝杆模组

LTH 12 单轴/1-axis

轨道内嵌 Built-in Guideway

螺杆驱动 Ball Screw Drive

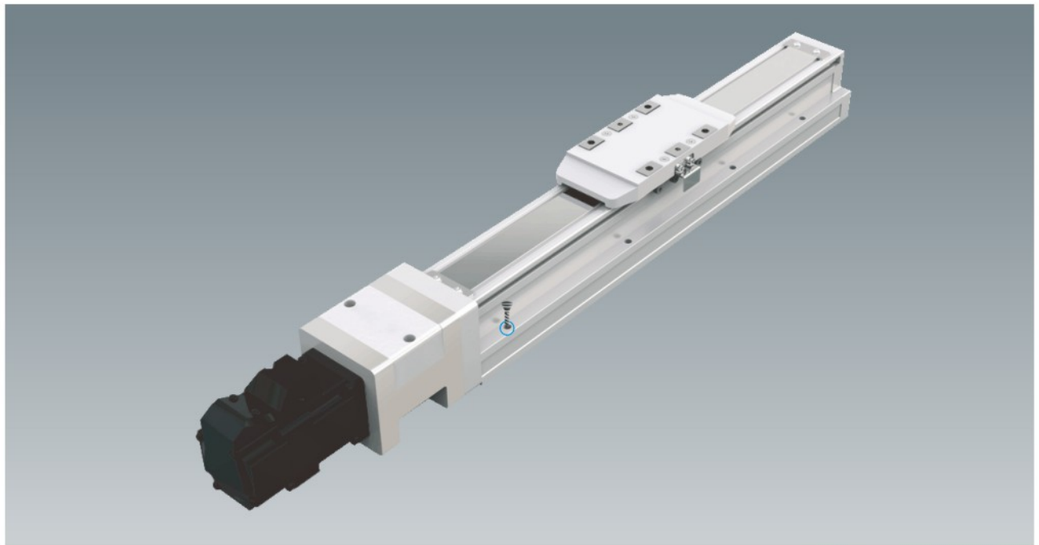

此圖僅供參考，出貨規格詳見尺寸圖面
The picture is just for the reference. Please check the the actual dimensions on the drawing.

最大行程 Maximum Stroke 1200mm

最高速度 Maximum Speed 1600mm/s

馬達容量 Motor Output 400W

滾珠螺桿 Ball Screw ⌀16mm

BC 馬達外露 Motor Exposed

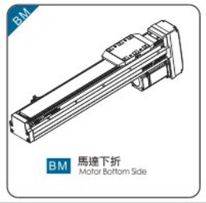

BM 馬達下折 Motor Bottom Side

BL 馬達左折 Motor Left Side

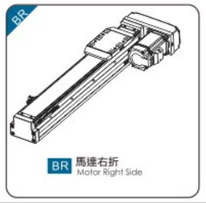

BR 馬達右折 Motor Right Side

型號表示方式 Ordering Method

LTH12 - L5 - 100 - BC - M40 B - C4 - 0001

本體型號 Model

行程 Stroke
50-1200mm
間隔50 50 mm Pitch

特注式樣 Customization Order No.

螺桿導程 Ball Screw Lead

5	5mm
10	10mm
20	20mm
32	32mm

馬達位置 Motor Position

BC	馬達外露 Motor Exposed
BM	馬達下折 Motor Bottom Side
BL	馬達左折 Motor Left Side
BR	馬達右折 Motor Right Side

馬達廠牌、功率 Motor Brand、Power Output

M	三菱 Mitsubishi	05	-	B
P	松下 Panasonic	10	-	
Y	安川 Yaskawa	20	-	
T	台達 Delta	40	400W	

*若無煞車則不表示。
If No Brake,No Description.

原點感應器 Home Sensor

外掛型 Outside	
C	馬達側 Motor Side
D	反馬達側 Opposite Motor Side
無 SENSOR No Sensor	
E	無 SENSOR No Sensor

* 選擇行程 50 時，有以下限制：
When the stroke is 50mm, the sensor installation has the following restrictions:
1. 原點與極限需放置於不同側。
Home sensor and limit sensor has to be installed on the different side of body.
2. 滑座左右兩側皆需安裝感應片。
Both sides of slider need to install the sensor trigger device.

端點極限感應器 Limit Sensor

外掛型 Outside	
3	1只 1 Pc
4	2只 2 Pc
無 SENSOR No Sensor	
5	無 SENSOR No Sensor

BALL SCREW MODULE
滚珠丝杆模组

基本仕樣 Specification

規格 Spec	位置重複精度 Repeatability (mm)		±0.01			
	螺桿導程 Ball Screw Lead (mm)		5	10	20	32
	最高速度 Maximum Speed (mm/s) ※1		250	500	1000	1600
	最大可搬重量 Maximum Payload	水平使用 Horizontal (kg)	110	88	40	30
		垂直使用 Vertical (kg)	33	22	10	8
	定格推力 Rated Thrust (N)		1388	694	347	218
	標準行程 Stroke / Pitch (mm) ※2		50-1250mm/50 間隔 50 mm Pitch			
部品 Parts	AC伺服馬達容量 AC Servo Motor Output (W)		400			
	滾珠螺桿外徑 Ball Screw Ø (mm)		C7φ16			
	連軸器 Coupling (mm)		10X14			
	原點感應器 Home Sensor	外掛 Outside	EE-SX674(NPN)			

感應器接線圖<原點及端點> Sensor Layout

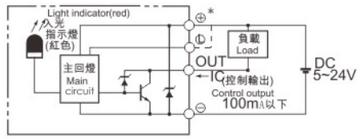

※ 1 馬達加減速設定0.2秒。
Acceleration and deacceleration value is set 0.2 second.

※ 2 行程超過800時，會產生螺桿偏擺震動，此時請將速度調降。詳細請參考P29頁說明。
When the stroke is over 800mm, the run-out of the ballscrew will occur. We recommend to low down the working speed under this circumstances. Please refer to P29 for details.

容許負載力距表 Allowable Moment

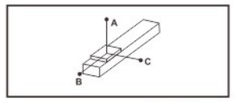

(單位 Unit:mm)

水平安裝 Horizontal Installation		A	B	C
導程 5 Lead	60kg	2850	250	340
	80kg	2100	180	250
	110kg	1500	120	170
導程 10 Lead	30kg	2850	490	600
	50kg	1700	280	350
	88kg	950	140	190
導程 20 Lead	10kg	3400	1250	1400
	22kg	1650	550	620
	40kg	900	290	330
導程 32 Lead	15kg	1100	570	550
	25kg	620	330	320
	30kg	520	270	260

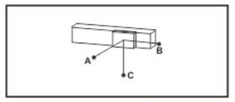

(單位 Unit:mm)

壁掛安裝 Wall Installation		A	B	C
導程 5 Lead	55kg	280	280	3300
	75kg	200	195	2400
	110kg	130	125	1550
導程 10 Lead	35kg	400	410	2500
	55kg	245	250	1550
	88kg	150	150	950
導程 20 Lead	12kg	900	1070	3000
	20kg	550	630	1800
	40kg	260	300	900
導程 32 Lead	15kg	440	570	1050
	30kg	210	270	520
	–	–	–	–

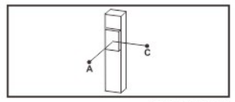

(單位 Unit:mm)

垂直安裝 Vertical Installation		A	C
導程 5 Lead	15kg	1200	1200
	22kg	820	820
	33kg	550	550
導程 10 Lead	10kg	1600	1600
	14kg	1150	1150
	22kg	730	730
導程 20 Lead	7kg	1800	1800
	10kg	1250	1250
	–	–	–
導程 32 Lead	5kg	1600	1600
	8kg	1000	1000
	–	–	–

靜態容許負載慣量 Static Loading Moment

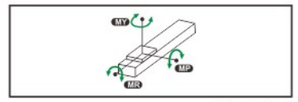

(單位 Unit:N.m)

MY	1168
MP	606
MR	606

※力距表所表示的數據，代表重心。
The torque value in the chart indicate the center of gravity.
※符合型錄規範的正常使用下，保證壽命為10000公里。
Operation life is 10,000km when the product is using under the specified conditions.
※倒吊使用無法套用標準規範，如有需求請洽詢我司業務。
Data information is not for ceiling-mount inverse use. Contact us for the details if you want to apply ceiling-mount inverse usage.

搭配伺服馬達一覽表 Suitable Motor Brand

廠牌 Brand	馬達記號 Mark	煞車有無 Brake	馬達容量 Watt	電源電壓 AC-Voltage	伺服馬達型號 Motor Model	驅動器型號 Driver Model
三菱 Mitsubishi	M	無煞車(水平仕樣) No Brake (Horizontal Type)	400	220	HG-KR43	MR-J4-40A
		有煞車(垂直仕樣) With Brake (Vertical Type)	400	220	HG-KR43B	MR-J4-40A
松下 Panasonic	P	無煞車(水平仕樣) No Brake (Horizontal Type)	400	220	MSMD042G1U	MBDHT2510
		有煞車(垂直仕樣) With Brake (Vertical Type)	400	220	MSMD042G1V	MBDHT2510
台達 Delta	T	無煞車(水平仕樣) No Brake (Horizontal Type)	400	220	ECMA-C20604ES	ASD-B20421-B
		有煞車(垂直仕樣) With Brake (Vertical Type)	400	220	ECMA-C20604FS	ASD-B20421-B

BALL SCREW MODULE
滚珠丝杆模组

LTH 12 单轴/1-axis

轨道内嵌
Built-in Guideway

螺杆驱动
Ball Screw Drive

馬達外露/馬達下折
Motor Exposed / Motor Bottom Side

BC 馬達外露 Motor Exposed 2D CAD 3D CAD

單位 Unit : mm

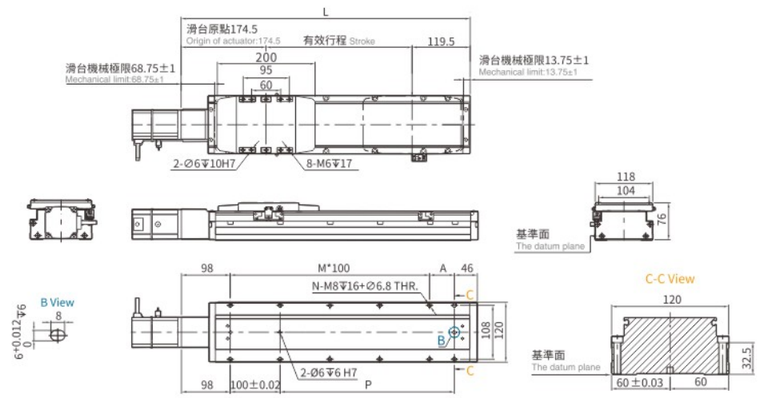

有效行程 Stroke	50	100	150	200	250	300	350	400	450	500	550	600	650	700	750	800	850	900	950	1000	1050	1100	1150	1200	1250
L	344	394	444	494	544	594	644	694	744	794	844	894	944	994	1044	1094	1144	1194	1244	1294	1344	1394	1444	1494	1544
A	100	50	100	50	100	50	100	50	100	50	100	50	100	50	100	50	100	50	100	50	100	50	100	50	100
M	1	2	2	3	3	4	4	5	5	6	6	7	7	8	8	9	9	10	10	11	11	12	12	13	13
N	6	8	8	10	10	12	12	14	14	16	16	18	18	20	20	22	22	24	24	26	26	28	28	30	30
P	100	150	200	250	300	350	400	450	500	550	600	650	700	750	800	850	900	950	1000	1050	1100	1150	1200	1250	1300
KG	5.05	5.4	5.75	6.1	6.45	6.8	7.15	7.5	7.85	8.2	8.55	8.9	9.25	9.6	9.95	10.3	10.65	11	11.35	11.7	12.05	12.4	12.75	13.1	13.45

BM 馬達下折 Motor Bottom Side 2D CAD 3D CAD

單位 Unit : mm

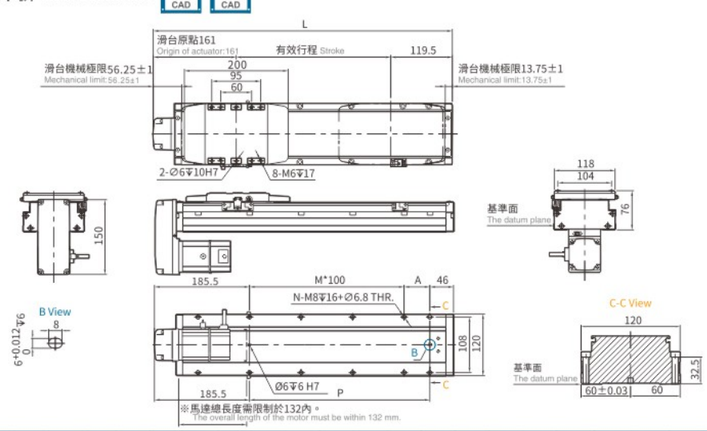

有效行程 Stroke	50	100	150	200	250	300	350	400	450	500	550	600	650	700	750	800	850	900	950	1000	1050	1100	1150	1200	1250
L	331.5	381.5	431.5	481.5	531.5	581.5	631.5	681.5	731.5	781.5	831.5	881.5	931.5	981.5	1031.5	1081.5	1131.5	1181.5	1231.5	1281.5	1331.5	1381.5	1431.5	1481.5	1531.5
A	100	50	100	50	100	50	100	50	100	50	100	50	100	50	100	50	100	50	100	50	100	50	100	50	100
M	0	1	1	2	2	3	3	4	4	5	5	6	6	7	7	8	8	9	9	10	10	11	11	12	12
N	4	6	6	8	8	10	10	12	12	14	14	16	16	18	18	20	20	22	22	24	24	26	26	28	28
P	100	150	200	250	300	350	400	450	500	550	600	650	700	750	800	850	900	950	1000	1050	1100	1150	1200	1250	1300
KG	5.21	5.56	5.91	6.26	6.61	6.96	7.31	7.66	8.01	8.36	8.71	9.06	9.41	9.76	10.11	10.46	10.81	11.16	11.51	11.86	12.21	12.56	12.91	13.26	13.61

※馬達下折時，若選用煞車馬達，或是超出馬達總長度限制時無法套用標準PIN孔，如有需求請洽我司業務。
When motor with brake assembled on lower side, or the total length over than spec limit, it may not use standard pinhole. Please contact our sales department if you need more information & requirement.

BALL SCREW MODULE
滚珠丝杆模组

LTH 12 单轴/1-axis

轨道内嵌
Built-in Guideway

螺杆驱动
Ball Screw Drive

馬達左折/馬達右折
Motor Left Side / Motor Right Side

BL 馬達左折 Motor Left Side 2D CAD 3D CAD

單位 Unit : mm

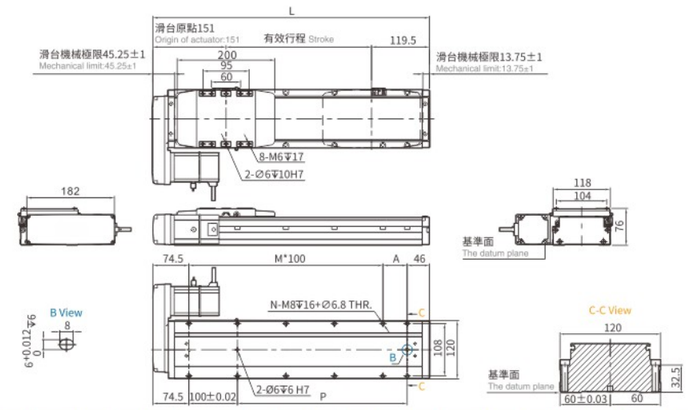

有效行程 Stroke	50	100	150	200	250	300	350	400	450	500	550	600	650	700	750	800	850	900	950	1000	1050	1100	1150	1200	1250
L	320.5	370.5	420.5	470.5	520.5	570.5	620.5	670.5	720.5	770.5	820.5	870.5	920.5	970.5	1020.5	1070.5	1120.5	1170.5	1220.5	1270.5	1320.5	1370.5	1420.5	1470.5	1520.5
A	100	50	100	50	100	50	100	50	100	50	100	50	100	50	100	50	100	50	100	50	100	50	100	50	100
M	1	2	2	3	3	4	4	5	5	6	6	7	7	8	8	9	9	10	10	11	11	12	12	13	13
N	6	8	8	10	10	12	12	14	14	16	16	18	18	20	20	22	22	24	24	26	26	28	28	30	30
P	100	150	200	250	300	350	400	450	500	550	600	650	700	750	800	850	900	950	1000	1050	1100	1150	1200	1250	1300
KG	5.25	5.6	5.95	6.3	6.65	7	7.35	7.7	8.05	8.4	8.75	9.1	9.45	9.8	10.15	10.85	11.2	11.55	11.9	12.25	12.6	12.56	12.91	13.26	13.61

BR 馬達右折 Motor Right Side 2D CAD 3D CAD

單位 Unit : mm

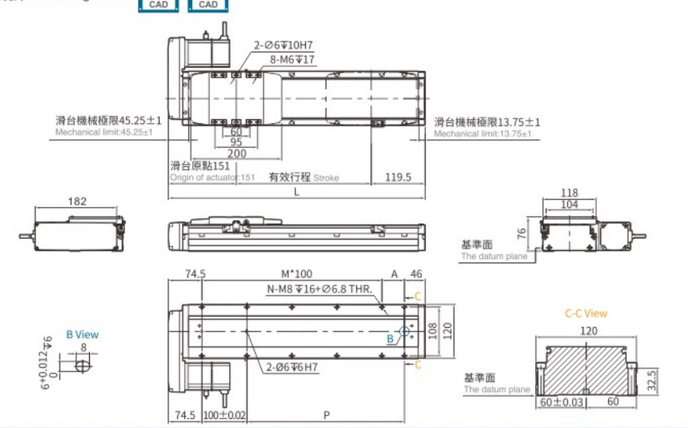

有效行程 Stroke	50	100	150	200	250	300	350	400	450	500	550	600	650	700	750	800	850	900	950	1000	1050	1100	1150	1200	1250
L	320.5	370.5	420.5	470.5	520.5	570.5	620.5	670.5	720.5	770.5	820.5	870.5	920.5	970.5	1020.5	1070.5	1120.5	1170.5	1220.5	1270.5	1320.5	1370.5	1420.5	1470.5	1520.5
A	100	50	100	50	100	50	100	50	100	50	100	50	100	50	100	50	100	50	100	50	100	50	100	50	100
M	1	2	2	3	3	4	4	5	5	6	6	7	7	8	8	9	9	10	10	11	11	12	12	13	13
N	6	8	8	10	10	12	12	14	14	16	16	18	18	20	20	22	22	24	24	26	26	28	28	30	30
P	100	150	200	250	300	350	400	450	500	550	600	650	700	750	800	850	900	950	1000	1050	1100	1150	1200	1250	1300
KG	5.25	5.6	5.95	6.3	6.65	7	7.35	7.7	8.05	8.4	8.75	9.1	9.45	9.8	10.15	10.85	11.2	11.55	11.9	12.25	12.6	12.56	12.91	13.26	13.61

05
Series

ALUMINUM ALLOY MODULE

铝合金材质模组

longzhichuang Co.,Ltd

Website: http://www.longzhi-chuang.com
Alibaba: https://longzhichuang.en.alibaba.com

PAGE.
51~58

ALUMINUM ALLOY MODULE
铝合金材质模组

KA SERIES

Model Number for KA90

KA090	-10	P	-0600	A	F0	U	S1	M101
Model	Lead	Precision Grade	Effective Stroke	Slider Type	Motor Flange	Cover	Limit Switch	Motor
	5 mm 10 mm	C: Normal P: Precision		A: Standard	F0:Direct	U: Without Cover None : Standard Cover	S1: OMRON SX671 S2: OMRON SX674 S3: Panasonic GX-F12A S4: Panasonic GX-F12A-P None: No Limit Switch	M05□, K05□ M10□, K10□ Motor specification: ref. catalof P.167 M:customer specified None:Without Motor

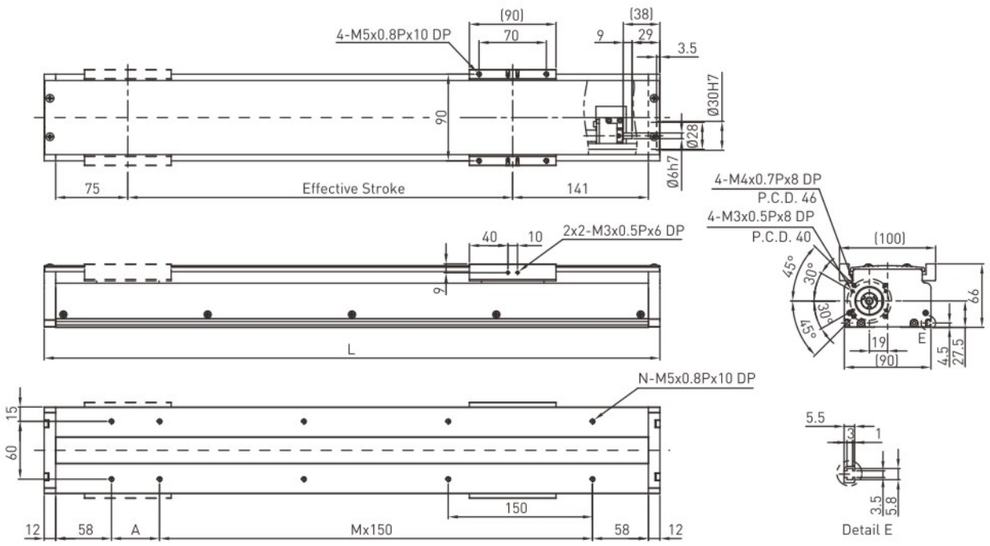

Effective stroke (mm)	L	A	M	N	Weight (kg)
50	290	150	0	4	3.38
100	340	50	1	6	3.78
150	390	100	1	6	4.18
200	440	150	1	6	4.58
250	490	50	2	8	4.98
300	540	100	2	8	5.38
350	590	150	2	8	5.78
400	640	50	3	10	6.18
450	690	100	3	10	6.58
500	740	150	3	10	6.98
550	790	50	4	12	7.38
600	840	100	4	12	7.78

AC motor output	W	100	
Drive		Ballscrew C7(normal)	
Lead	mm	5	10
Rated RPM	RPM	3000	3000
Max linear speed*	mm/sec	250	500
Rated thrust	N	280	140
Repeatability	mm	±0.02	
Effective stroke	mm	150~600	
Max load (H)	kg	24	12
Rated dynamic load**	Fyd	N	50	50
	Fzd	N	240	160
	Mxd	N-m	5	4.5
	Myd	N-m	2.3	2.1
	Mzd	N-m	2.3	2.1
Permitted load condition***	$\frac{Fy}{Fyd}+\frac{Fz}{Fzd}+\frac{Mx}{Mxd}+\frac{My}{Myd}+\frac{Mz}{Mzd}\leq 1$ Fy, Fz, Mx, My, Mz are working loads		

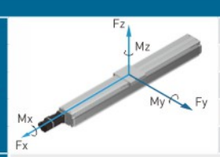

* Vibration might occur when the effective stroke is longer than 550mm.
The maximum speed should be decreased by 15% for every 100mm of increased stroke.
** The load condition is based on 10,000km operation.

ALUMINUM ALLOY MODULE
铝合金材质模组

KA SERIES

Model Number for KA100

KA100	-20	P	-1050	A	F0	U	S1	M101
Model	Lead	Precision Grade	Effective Stroke	Slider Type	Motor Flange	Cover	Limit Switch	Motor
	5 mm 10 mm 20 mm	C: Normal P: Precision		A: Standard	F0:Direct	U: Without Cover None : Standard Cover	S1: OMRON SX671 S2: OMRON SX674 S3: Panasonic GX-F12A S4: Panasonic GX-F12A-P None: No Limit Switch	M05□, K05□ M10□, K10□ Motor specification: ref. catalof P.167 M:customer specified None:Without Motor

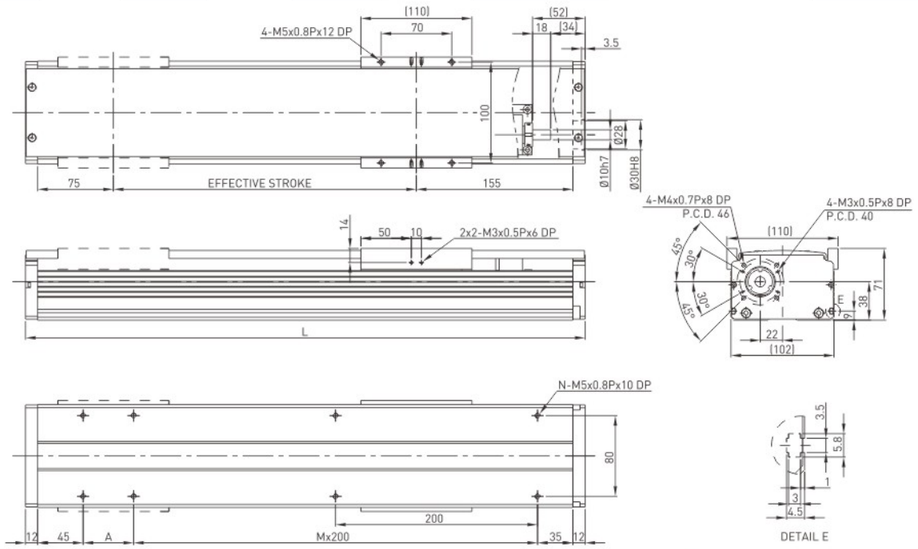

Effective stroke (mm)	L	A	M	N	Weight (kg)
100	354	50	1	6	4.86
150	404	100	1	6	5.34
200	454	150	1	6	5.81
250	504	200	1	6	6.29
300	554	50	2	8	6.77
350	604	100	2	8	7.25
400	654	150	2	8	7.73
450	704	200	2	8	8.2
500	754	50	3	10	8.67
550	804	100	3	10	9.15
600	854	150	3	10	9.63
650	904	200	3	10	10.11
700	954	50	4	12	10.59
750	1004	100	4	12	11.06
800	1054	150	4	12	11.54
850	1104	200	4	12	12.02
900	1154	50	5	14	12.49
950	1204	100	5	14	12.97
1000	1254	150	5	14	13.45
1050	1304	200	5	14	13.93

AC motor output	W	100		
Drive		Ballscrew C7(normal)		
Lead	mm	5	10	20
Rated RPM	RPM	3000	3000	3000
Max linear speed*	mm/sec	250	500	1000
Rated thrust	N	280	140	70
Repeatability	mm	±0.02		
Effective stroke	mm	100~1050		
Max load (H)	kg	50	32	20
Rated dynamic load**	Fyd	N	50	50	50
	Fzd	N	500	320	200
	Mxd	N-m	16	16	16
	Myd	N-m	14	13.5	13
	Mzd	N-m	14	13.5	13
Permitted load condition***	$\frac{Fy}{Fyd}+\frac{Fz}{Fzd}+\frac{Mx}{Mxd}+\frac{My}{Myd}+\frac{Mz}{Mzd}\leq 1$ Fy, Fz, Mx, My, Mz are working loads			

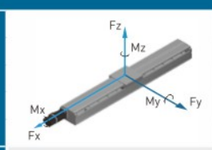

* Vibration might occur when the effective stroke is longer than 650mm.
The maximum speed should be decreased by 15% for every 100mm of increased stroke.
** The load condition is based on 10,000km operation.

ALUMINUM ALLOY MODULE
铝合金材质模组

KA SERIES

Model Number for KA120

KA120	-20	P	-1050	A	F0	U	S1	M101
Model	Lead	Precision Grade	Effective Stroke	Slider Type	Motor Flange	Cover	Limit Switch	Motor
	5 mm 10 mm 20 mm	C: Normal P: Precision		A: Standard	F0 : Direct	U: Without Cover None : Standard Cover	S1: OMRON SX671 S2: OMRON SX674 S3: Panasonic GX-F12A S4: Panasonic GX-F12A-P None: No Limit Switch	M05□, K05□ M10□, K10□ Motor specification: ref. catalof P.167 M:customer specified None:Without Motor

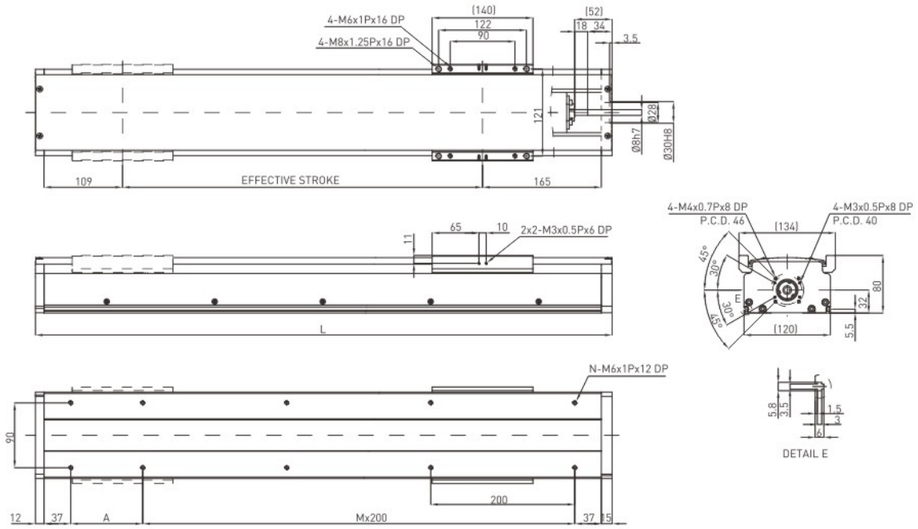

Effective stroke (mm)	L	A	M	N	Weight (kg)
100	401	100	1	6	7.5
150	451	150	1	6	8.13
200	501	200	1	6	8.76
250	551	50	2	8	9.39
300	601	100	2	8	10.02
350	651	150	2	8	10.65
400	701	200	2	8	11.28
450	751	50	3	10	11.91
500	801	100	3	10	12.54
550	851	150	3	10	13.17
600	901	200	3	10	13.8
650	951	50	4	12	14.43
700	1001	100	4	12	15.06
750	1051	150	4	12	15.69
800	1101	200	4	12	16.32
850	1151	50	5	14	16.95
900	1201	100	5	14	17.58
950	1251	150	5	14	18.21
1000	1301	200	5	14	18.84
1050	1351	50	6	16	19.47

AC motor output	W	100		
Drive		Ballscrew C7(normal)		
Lead	mm	5	10	20
Rated RPM	RPM	3000	3000	3000
Max linear speed*	mm/sec	250	500	1000
Rated thrust	N	560	280	140
Repeatability	mm	±0.02		
Effective stroke	mm	100~1050		
Max load (H)	kg	50	32	20
Rated dynamic load**	Fyd	N	50	50	50
	Fzd	N	500	320	200
	Mxd	N-m	25	27	28
	Myd	N-m	20	22	23
	Mzd	N-m	20	22	23
Permitted load condition***	$\frac{Fy}{Fyd}+\frac{Fz}{Fzd}+\frac{Mx}{Mxd}+\frac{My}{Myd}+\frac{Mz}{Mzd}\leq 1$ Fy, Fz, Mx, My, Mz are working loads			

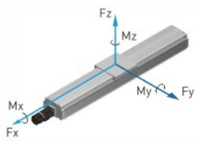

* Vibration might occur when the effective stroke is longer than 650mm.
The maximum speed should be decreased by 15% for every 100mm of increased stroke.
** The load condition is based on 10,000km operation.

ALUMINUM ALLOY MODULE
铝合金材质模组

KA SERIES

Model Number for KA136

KA136	-20	P	-1050	A	F0	U	S1	M201
Model	Lead	Precision Grade	Effective Stroke	Slider Type	Motor Flange	Cover	Limit Switch	Motor
	5 mm 10 mm 20 mm	C: Normal P: Precision		A: Standard	F0 : Direct	U: Without Cover None : Standard Cover	S1: OMRON SX671 S2: OMRON SX674 S3: Panasonic GX-F12A S4: Panasonic GX-F12A-P None: No Limit Switch	M20□, K20□ M40□, K40□ Motor specification: ref. catalof P.167 M:customer specified None:Without Motor

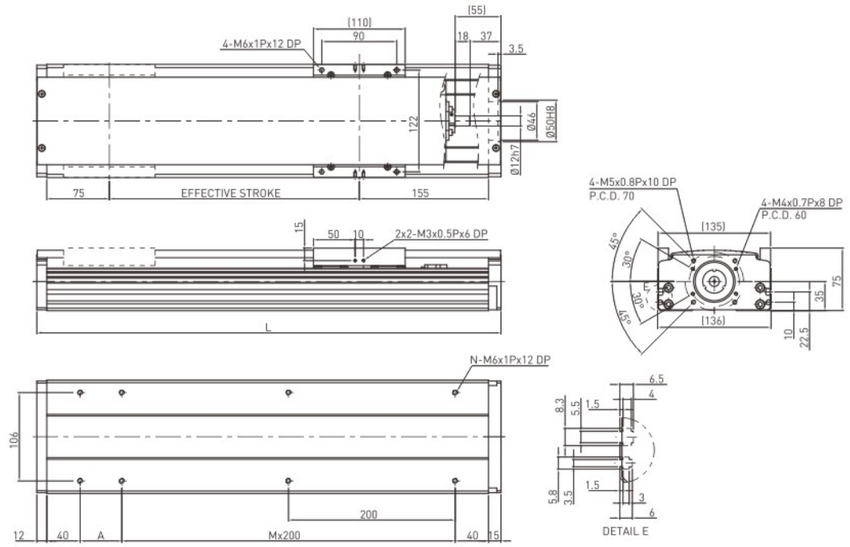

Effective stroke (mm)	L	A	M	N	Weight (kg)
100	357	50	1	6	6.19
150	407	100	1	6	6.74
200	457	150	1	6	7.29
250	507	200	1	6	7.84
300	557	50	2	8	8.39
350	607	100	2	8	8.94
400	657	150	2	8	9.49
450	707	200	2	8	10.05
500	757	50	3	10	10.6
550	807	100	3	10	11.15
600	857	150	3	10	11.7
650	907	200	3	10	12.25
700	957	50	4	12	12.8
750	1007	100	4	12	13.35
800	1057	150	4	12	13.9
850	1107	200	4	12	14.45
900	1157	50	5	14	15
950	1207	100	5	14	15.55
1000	1257	150	5	14	16.1
1050	1307	200	5	14	16.65

AC motor output	W	200		
Drive		Ballscrew C7(normal)		
Lead	mm	5	10	20
Rated RPM	RPM	3000	3000	3000
Max linear speed*	mm/sec	250	500	1000
Rated thrust	N	560	280	140
Repeatability	mm	±0.02		
Effective stroke	mm	100~1050		
Max load (H)	kg	95	75	40
Rated dynamic load**	Fyd	N	50	50	50
	Fzd	N	950	750	400
	Mxd	N-m	21	21	26
	Myd	N-m	17	17	21
	Mzd	N-m	17	17	21
Permitted load condition***	$\frac{Fy}{Fyd}+\frac{Fz}{Fzd}+\frac{Mx}{Mxd}+\frac{My}{Myd}+\frac{Mz}{Mzd}\leq 1$ Fy, Fz, Mx, My, Mz are working loads			

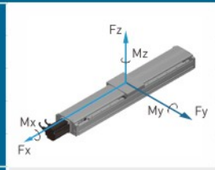

* Vibration might occur when the effective stroke is longer than 650mm.
The maximum speed should be decreased by 15% for every 100mm of increased stroke.
** The load condition is based on 10,000km operation.

ALUMINUM ALLOY MODULE
铝合金材质模组

KA SERIES

Model Number for KA150

KA150	-10	P	-1250	A	F0	U	S1	M201
Model	Lead	Precision Grade	Effective Stroke	Slider Type	Motor Flange	Cover	Limit Switch	Motor
	10 mm 20 mm	C: Normal P: Precision		A: Standard	F0 : Direct	U: Without Cover None : Standard Cover	S1: OMRON SX671 S2: OMRON SX674 S3: Panasonic GX-F12A S4: Panasonic GX-F12A-P None: No Limit Switch	M20□, K20□ M40□, K40□ Motor specification: ref. catalof P.167 M:customer specified None:Without Motor

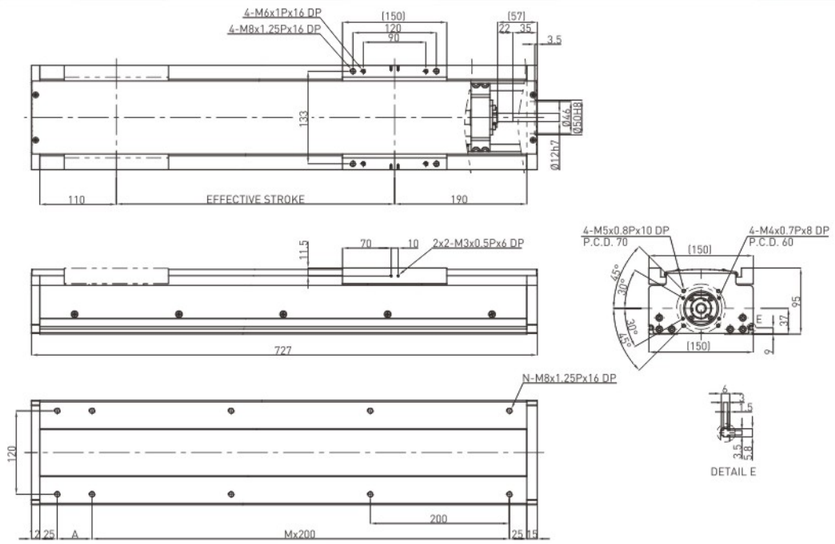

Effective stroke (mm)	L	A	M	N	Weight (kg)
150	477	200	1	6	12.71
200	527	50	2	8	13.59
250	577	100	2	8	14.47
300	627	150	2	8	15.35
350	677	200	2	8	16.23
400	727	50	3	10	17.11
450	777	100	3	10	17.99
500	827	150	3	10	18.87
550	877	200	3	10	19.75
600	927	50	4	12	20.63
650	977	100	4	12	21.51
700	1027	150	4	12	22.39
750	1077	200	4	12	23.27
800	1127	50	5	14	24.15
850	1177	100	5	14	25.03
900	1227	150	5	14	25.91
950	1277	200	5	14	26.79
1000	1327	50	6	16	27.67
1050	1377	100	6	16	28.55
1100	1427	150	6	16	29.43
1150	1477	200	6	16	30.31
1200	1527	50	7	18	31.19
1250	1577	100	7	18	32.07

AC motor output		W	200	
Drive			Ballscrew C7(normal)	
Lead		mm	10	20
Rated RPM		RPM	3000	3000
Max linear speed*		mm/sec	500	1000
Rated thrust		N	280	140
Repeatability		mm	±0.02	
Effective stroke		mm	150~1250	
Max load (H)		kg	80	40
Rated dynamic load**	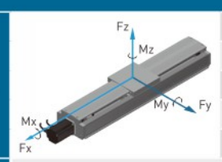	Fyd	N	50	50
		Fzd	N	800	400
		Mxd	N-m	56	63
		Myd	N-m	49	53
		Mzd	N-m	49	53
Permitted load condition***	$\frac{Fy}{Fyd}+\frac{Fz}{Fzd}+\frac{Mx}{Mxd}+\frac{My}{Myd}+\frac{Mz}{Mzd}\leq 1$ Fy, Fz, Mx, My, Mz are working loads			

* Vibration might occur when the effective stroke is longer than 650mm.
The maximum speed should be decreased by 15% for every 100mm of increased stroke.
** The load condition is based on 10,000km operation.

铝合金材质模组
ALUMINUM ALLOY MODULE

ALUMINUM ALLOY MODULE
铝合金材质模组

KA SERIES

Model Number for KA170

KA170	-20	P	-1250	A	F0	U	S1	M401
Model	Lead	Precision Grade	Effective Stroke	Slider Type	Motor Flange	Cover	Limit Switch	Motor
	10 mm 20 mm	C: Normal P: Precision		A: Standard	F0 : Direct	U: Without Cover None : Standard Cover	S1: OMRON SX671 S2: OMRON SX674 S3: Panasonic GX-F12A S4: Panasonic GX-F12A-P None: No Limit Switch	M40□, K40□ M75□, K75□ Motor specification: ref. catalof P.167 M:customer specified None:Without Motor

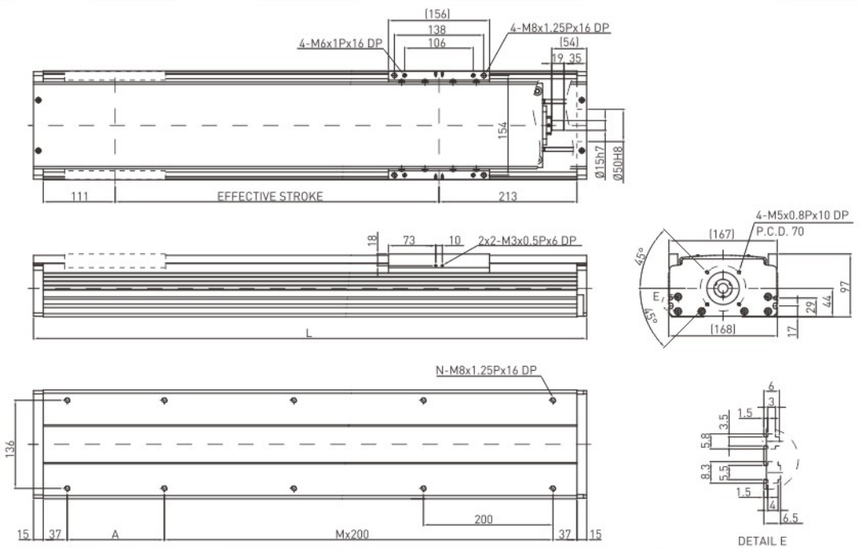

Effective stroke (mm)	L	A	M	N	Weight (kg)
150	504	200	1	6	14.57
200	554	50	2	8	15.45
250	604	100	2	8	16.33
300	654	150	2	8	17.21
350	704	200	2	8	18.09
400	754	50	3	10	18.97
450	804	100	3	10	19.85
500	854	150	3	10	20.73
550	904	200	3	10	21.61
600	954	50	4	12	22.49
650	1004	100	4	12	23.37
700	1054	150	4	12	24.25
750	1104	200	4	12	25.13
800	1154	50	5	14	26.01
850	1204	100	5	14	26.89
900	1254	150	5	14	27.77
950	1304	200	5	14	28.65
1000	1354	50	6	16	29.53
1050	1404	100	6	16	30.41
1100	1454	150	6	16	31.29
1150	1504	200	6	16	32.17
1200	1554	50	7	18	33.05
1250	1604	100	7	18	33.92

AC motor output		W	400	
Drive			Ballscrew C7(normal)	
Lead		mm	10	20
Rated RPM		RPM	3000	3000
Max linear speed*		mm/sec	500	1000
Rated thrust		N	560	280
Repeatability		mm	±0.02	
Effective stroke		mm	150~1250	
Max load (H)		kg	125	75
Rated dynamic load**	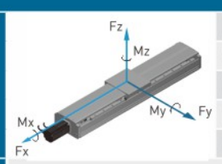	Fyd	N	50	50
		Fzd	N	1250	750
		Mxd	N-m	100	110
		Myd	N-m	85	90
		Mzd	N-m	85	90
Permitted load condition***	$\frac{Fy}{Fyd}+\frac{Fz}{Fzd}+\frac{Mx}{Mxd}+\frac{My}{Myd}+\frac{Mz}{Mzd}\leq 1$ Fy, Fz, Mx, My, Mz are working loads			

* Vibration might occur when the effective stroke is longer than 650mm.
The maximum speed should be decreased by 15% for every 100mm of increased stroke.
** The load condition is based on 10,000km operation.

06

Series

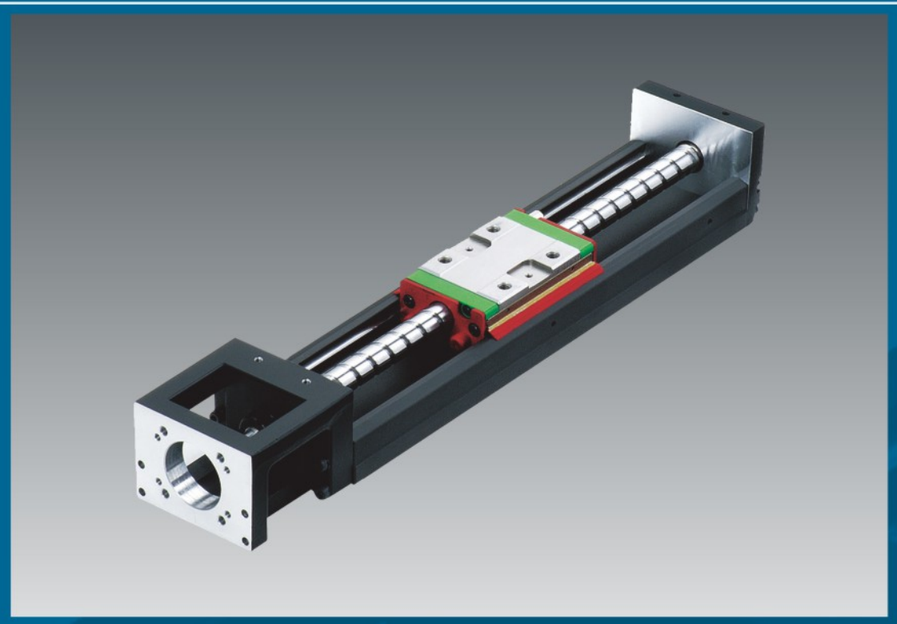

KK SERIES MODULE

上银KK系列模组

longzhichuang Co.,Ltd

Website: http://www.longzhi-chuang.com
Alibaba: https://longzhichuang.en.alibaba.com

PAGE.
59~70

KK SERIES MODULE
上银KK系列模组

KK SERIES

Single-Axis Robot

单轴机器人

Kk单轴机器人主要是透过模块化之设计，将滚珠螺杆和线性滑轨整合在一起，因此可提供具有高精度、快速安装、选用、高刚性、体积小、节省空间等特性。

藉由高精度之滚珠螺杆做为传动机构，以及配合最佳化设计之U型轨道做为导引机构，来确保精度与刚性之需求。

The KK single-axis robot is driven by a ballscrew while a guideway slides on an optimized U-rail to achieve higher accuracy and greater stiffness.

特性 Features

- 设计及安装容易
- 体积小重量轻
- 高精度
- 高刚性
- 配备齐全
- 最适化设计

轨道结构由有限元素分析，得到最好刚性与重量，分析如右图所示：

- An integrated system
- Easy installation and maintenance
- Compact and lightweight
- High accuracy
- High stiffness
- Complete line of accessories

The structure of rail is analyzed by FEA to get the best rigidity and weight. The analysis results are shown as the right figures.

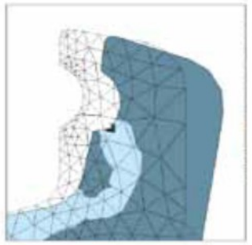

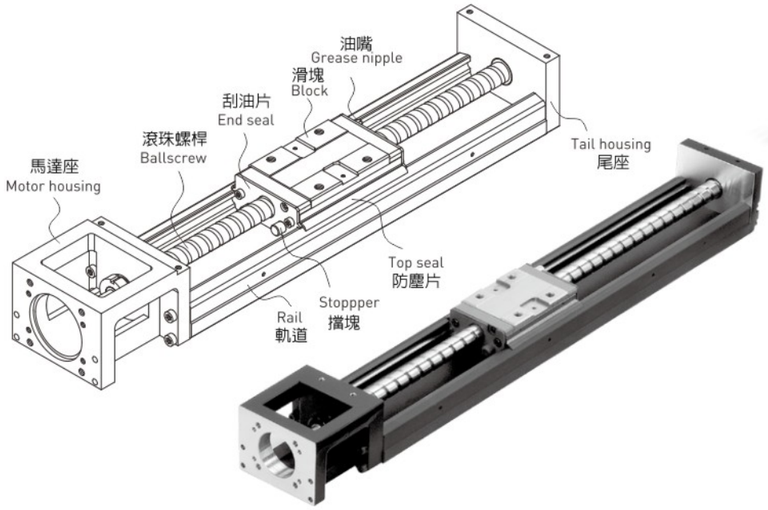

KK SERIES MODULE
上银KK系列模组

选购配件 Accessories

为了因应各种的使用需求，KK单轴机器人可另外选购铝护盖、伸缩护套、马达连接法兰、极限开关。

- 铝护盖、伸缩护套：可防止异物、杂质进入KK单轴机器人之内而影响其使用寿命、精度、顺畅度
- 马达连接法兰：可将各种不同马达锁固于KK单轴机器人之上
- 极限开关：提供滑块定位、启动原点以及防止滑块超过行程之安全机制

Accessories of KK single-axis robot are also supported for specific demands, such as an aluminum cover, bellows, motor adaptor flange and limit switchs.

- Aluminum cover and bellow: contamination protection
- Motor adaptor flange: connection for different types of motors
- Limit switchs: starting point, positioning and other safety matters

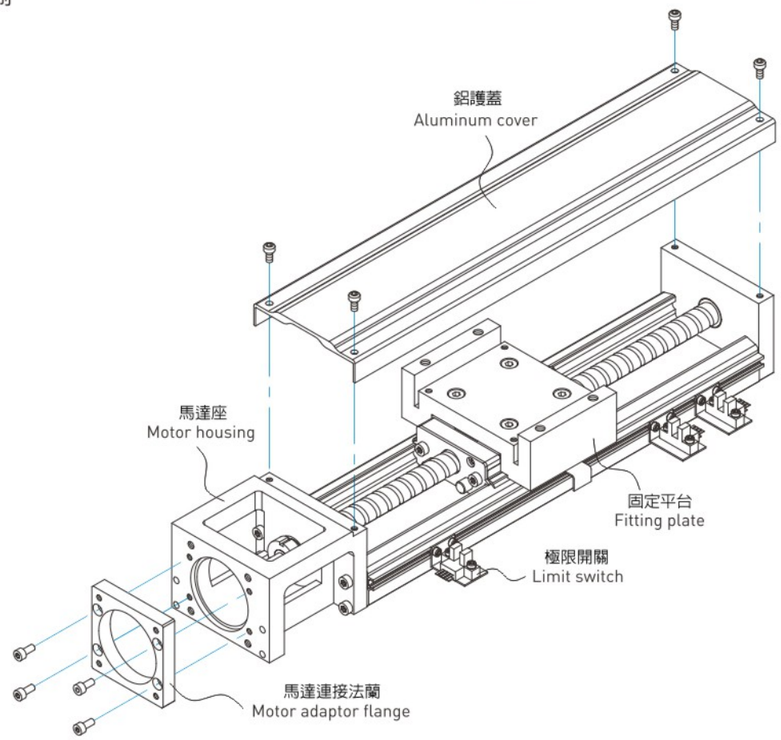

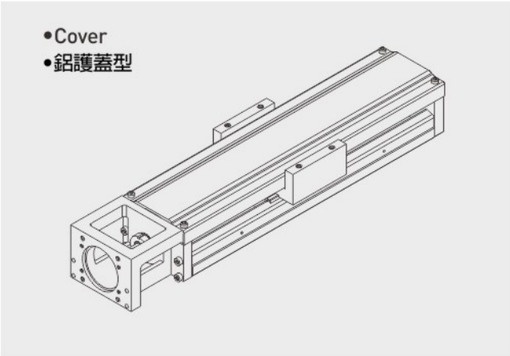

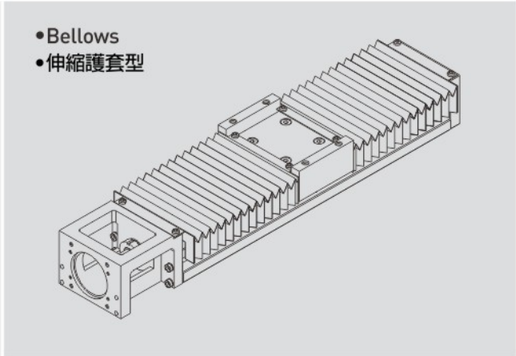

KK SERIES MODULE
上银KK系列模组

产品型号 Model Number of KK Series

KK 60D 10 P E - 400 E A 2 E - F0 C S0 M051

KK Series

尺寸:
Nominal Width:
30, 40, 50, 60,
60D, 80, 86, 86D,
100, 130

Ballscrew Lead:
滚珠螺桿導程：
KK30: 1
KK40: 1
KK50: 2
KK60/KK60D: 5, 10
KK80: 10, 20
KK86/KK86D: 10, 20
KK100: 20
KK130: 25

精度等級：
P：精密級，C：一般級
Accuracy Grade:
P: Precision, C: Normal

E：滚珠螺桿特殊加工
無記號：滚珠螺桿標準型
E: Ballscrew Special Order
None: Normal Type

Rail Length (mm)
KK30: 75, 100, 125, 150, 175, 200
KK40: 100, 150, 200
KK50: 150, 200, 250, 300
KK60/KK60D: 150, 200, 300, 400, 500, 600
KK80: 340, 440, 540, 640, 740, 940
KK86/KK86D: 340, 440, 540, 640, 740, 940
KK100: 980, 1080, 1180, 1280, 1380
KK130: 980, 1180, 1380, 1680

E：軌道特殊加工
無記號：軌道標準型
E: Rail Special Order
None: Normal Type

馬達規格：
M：馬達規格
客戶指定
Motor specification:
M: customer specified
None: Without Motor

包含極限開關：
Limit Switch:
S0：只有極限軌道
S0: Switch Rail Only
S1: Omron EE-SX671
S2: Omron EE-SX674
S3: Panasonic GX-F12A
S4: Panasonic GX-F12A-P
S5: YAMATAKE APM-D3B1-03
(suitable for KK30)
SE：極限開關規格客戶指定
無記號：無
SE: Sensor Special Order
None: No Limit Switch and
Switch Rail

C：鋁護蓋
B：伸縮護套
無記號：無護蓋
C: Aluminum Cover
B: Bellows
None: Normal Type

馬達連接法蘭：
FE：特殊加工
Motor Adaptor Flange:
FE：Flange Special Order

E：滑座特殊加工
無記號：滑座標準型
E: Block Special Order
None: Normal Type

滑座數量：1, 2
Number of Blocks: 1, 2

滑座型式：
A：標準型
S：輕載型
Block Type:
A: Normal
S: Short

KK SERIES MODULE
上银KK系列模组

KK30

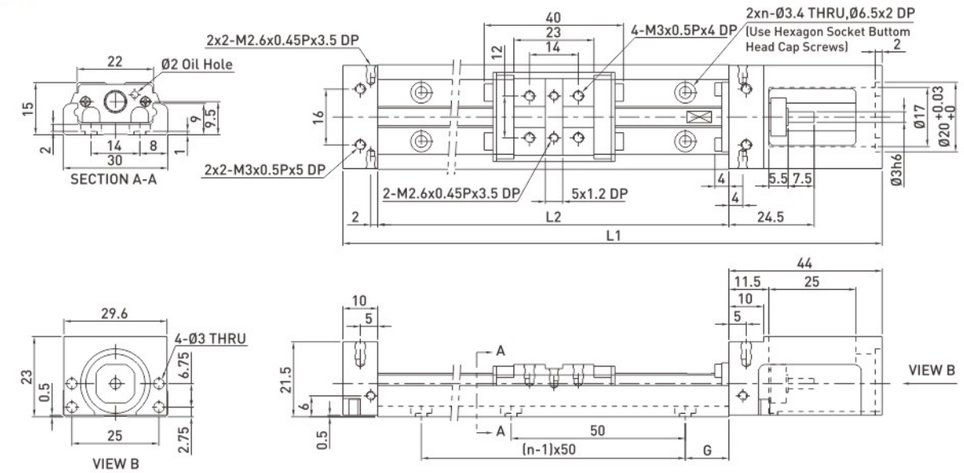

Rail Length L2 (mm)	Total Length L1 (mm)	Maximum Stroke (mm)		G (mm)	n	Mass (kg)	
		A1 Block	A2 Block			A1 Block	A2 Block
75	129	31	-	12.5	2	0.2	-
100	154	56	-	25	2	0.23	-
125	179	81	45	12.5	3	0.26	0.3
150	204	106	70	25	3	0.29	0.33
175	229	131	95	12.5	4	0.32	0.36
200	254	156	120	25	4	0.35	0.39

KK40

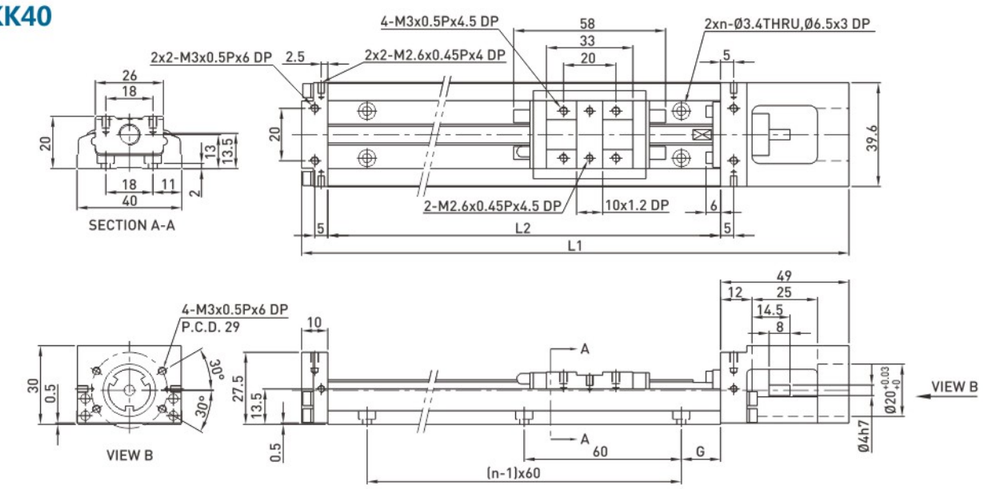

Rail Length L2 (mm)	Total Length L1 (mm)	Maximum Stroke (mm)		G (mm)	n	Mass (kg)	
		A1 Block	A2 Block			A1 Block	A2 Block
100	159	36	-	20	2	0.48	-
150	209	86	34	15	3	0.6	0.67
200	259	136	84	40	3	0.72	0.79

KK SERIES MODULE
上银KK系列模组

KK50

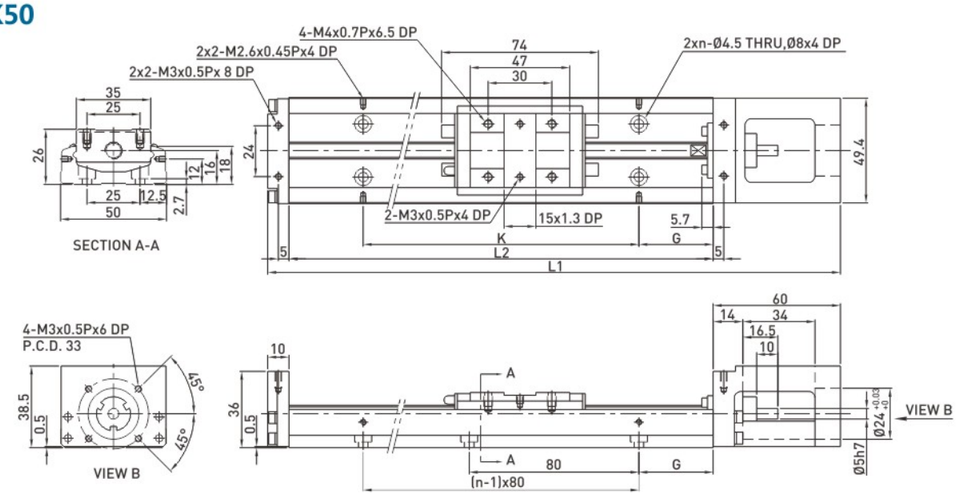

Rail Length L2 (mm)	Total Length L1 (mm)	Maximum Stroke (mm)		G (mm)	K (mm)	n	Mass (kg)	
		A1 Block	A2 Block				A1 Block	A2 Block
150	220	70	-	35	80	2	1	-
200	270	120	55	20	160	3	1.2	1.4
250	320	170	105	45	160	3	1.4	1.6
300	370	220	155	30	240	4	1.6	1.8

KK60
标准型
Standard

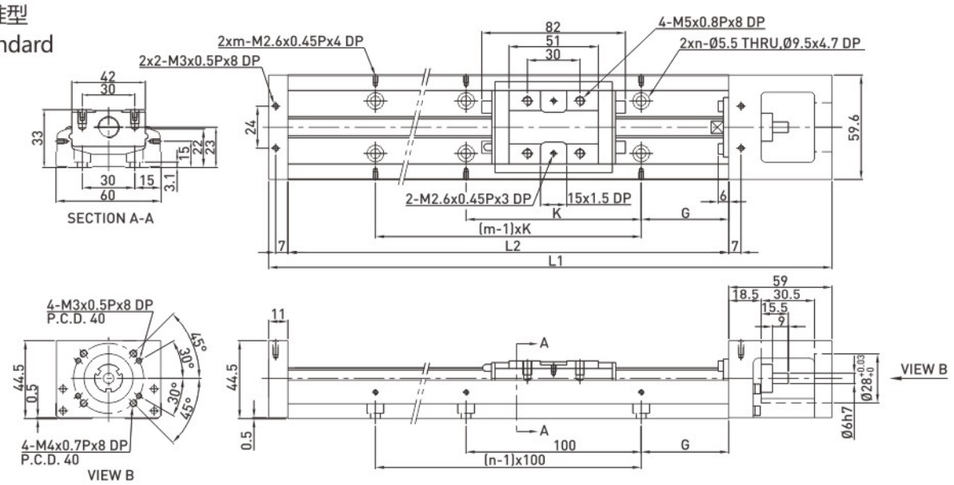

Rail Length L2 (mm)	Total Length L1 (mm)	Maximum Stroke (mm)		G (mm)	K (mm)	n	m	Mass (kg)	
		A1 Block	A2 Block					A1 Block	A2 Block
150	220	60	-	25	100	2	2	1.5	-
200	270	110	-	50	100	2	2	1.8	-
300	370	210	135	50	200	3	2	2.4	2.7
400	470	310	235	50	100	4	4	3	3.3
500	570	410	335	50	200	5	3	3.6	3.9
600	670	510	435	50	100	6	6	4.2	4.6

KK SERIES MODULE
上银KK系列模组

KK60
轻载型
Light Duty

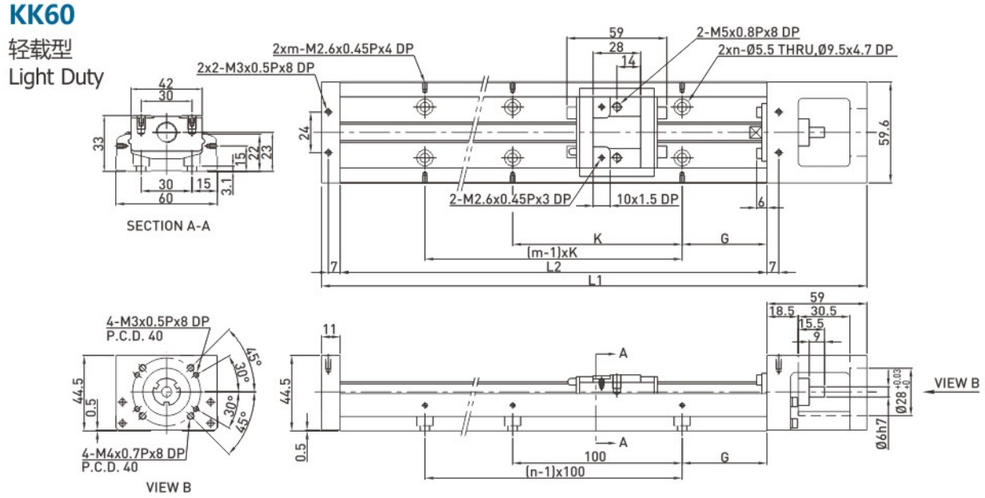

Rail Length L2 (mm)	Total Length L1 (mm)	Maximum Stroke (mm)		G (mm)	K (mm)	n	m	Mass (kg)	
		S1 Block	S2 Block					S1 Block	S2 Block
150	220	85	34	25	100	2	2	1.4	1.6
200	270	135	84	50	100	2	2	1.7	1.9
300	370	235	184	50	200	3	2	2.3	2.5
400	470	335	284	50	100	4	4	2.9	3.1
500	570	435	384	50	200	5	3	3.5	3.7
600	670	535	484	50	100	6	6	4.1	4.3

KK60D
标准型
Standard

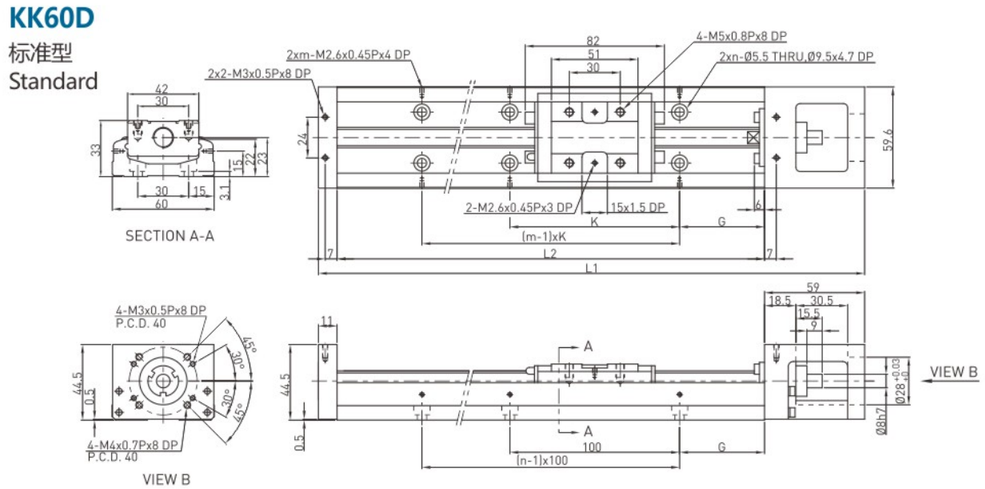

Rail Length L2 (mm)	Total Length L1 (mm)	Maximum Stroke (mm)		G (mm)	K (mm)	n	m	Mass (kg)	
		A1 Block	A2 Block					A1 Block	A2 Block
150	220	60	-	25	100	2	2	1.5	-
200	270	110	-	50	100	2	2	1.8	-
300	370	210	135	50	200	3	2	2.4	2.7
400	470	310	235	50	100	4	4	3	3.3
500	570	410	335	50	200	5	3	3.6	3.9
600	670	510	435	50	100	6	6	4.2	4.6

KK SERIES MODULE
上银KK系列模组

KK60D
轻载型
Light Duty

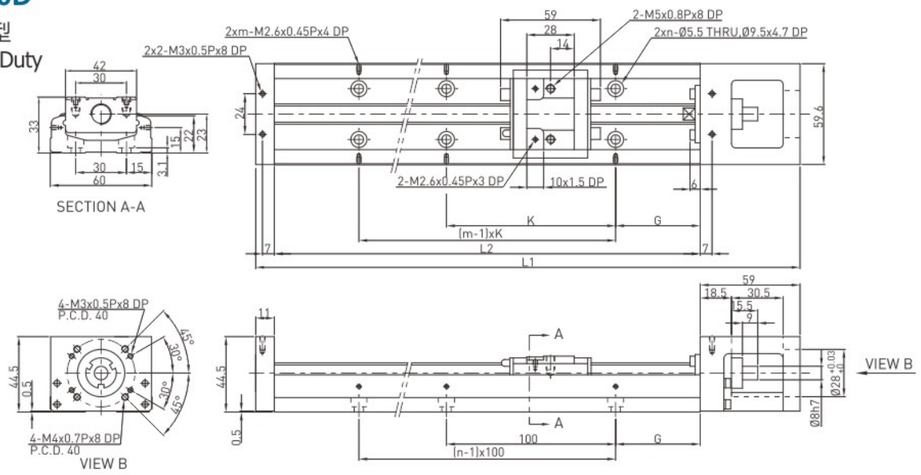

Rail Length L2 (mm)	Total Length L1 (mm)	Maximum Stroke (mm)		G (mm)	K (mm)	n	m	Mass (kg)	
		S1 Block	S2 Block					S1 Block	S2 Block
150	220	85	34	25	100	2	2	1.4	1.6
200	270	135	84	50	100	2	2	1.7	1.9
300	370	235	184	50	200	3	2	2.3	2.5
400	470	335	284	50	100	4	4	2.9	3.1
500	570	435	384	50	200	5	3	3.5	3.7
600	670	535	484	50	100	6	6	4.1	4.3

KK80
标准型
Standard

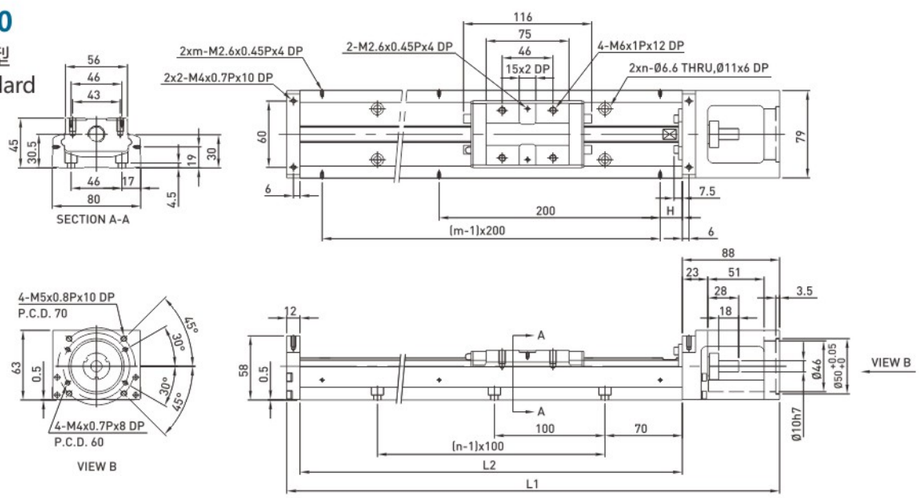

Rail Length L2 (mm)	Total Length L1 (mm)	Maximum Stroke (mm)		H (mm)	n	m	Mass (kg)	
		A1 Block	A2 Block				A1 Block	A2 Block
340	440	216.5	108.5	70	3	2	5.3	6
440	540	316.5	208.5	20	4	3	6.5	7.2
540	640	416.5	308.5	70	5	3	7.6	8.3
640	740	516.5	408.5	20	6	4	8.8	9.5
740	840	616.5	508.5	70	7	4	10	10.7
940	1040	816.5	708.5	70	9	5	12.4	13.1

KK SERIES MODULE
上银KK系列模组

KK80
轻载型
Light Duty

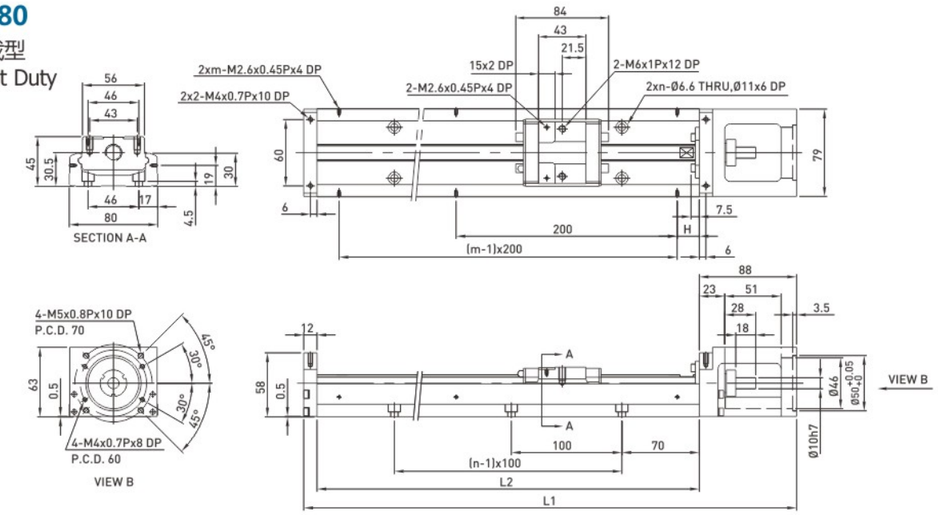

Rail Length L2 (mm)	Total Length L1 (mm)	Maximum Stroke (mm)		H (mm)	n	m	Mass (kg)	
		S1 Block	S2 Block				S1 Block	S2 Block
340	440	248.5	172.5	70	3	2	5	5.4
440	540	348.5	272.5	20	4	3	6.2	6.6
540	640	448.5	372.5	70	5	3	7.3	7.7
640	740	548.5	472.5	20	6	4	8.5	8.9
740	840	648.5	572.5	70	7	4	9.7	10.1
940	1040	848.5	772.5	70	9	5	12.1	12.5

KK86
标准型
Standard

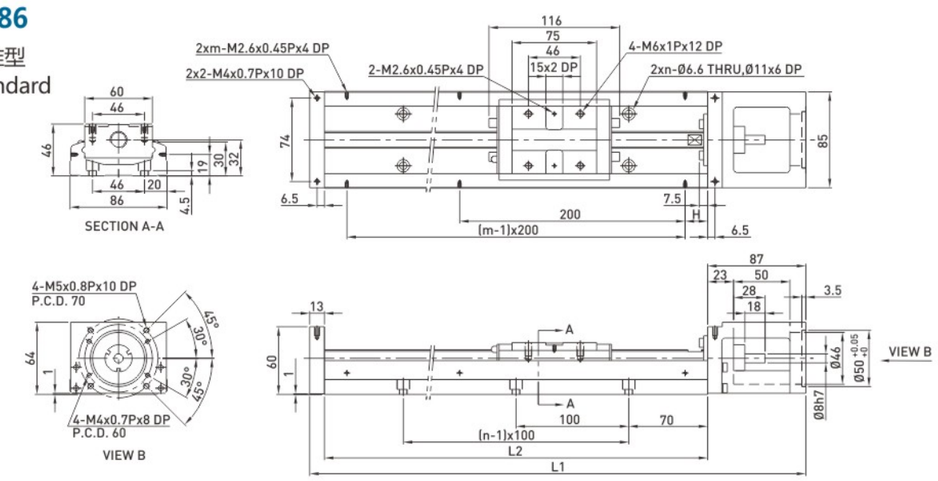

Rail Length L2 (mm)	Total Length L1 (mm)	Maximum Stroke (mm)		H (mm)	n	m	Mass (kg)	
		A1 Block	A2 Block				A1 Block	A2 Block
340	440	216.5	108.5	70	3	2	5.7	6.5
440	540	316.5	208.5	20	4	3	6.9	7.7
540	640	416.5	308.5	70	5	3	8.0	8.8
640	740	516.5	408.5	20	6	4	9.2	10.0
740	840	616.5	508.5	70	7	4	10.4	11.2
940	1040	816.5	708.5	70	9	5	11.6	12.4

KK SERIES MODULE
上银KK系列模组

KK86
轻载型
Light Duty

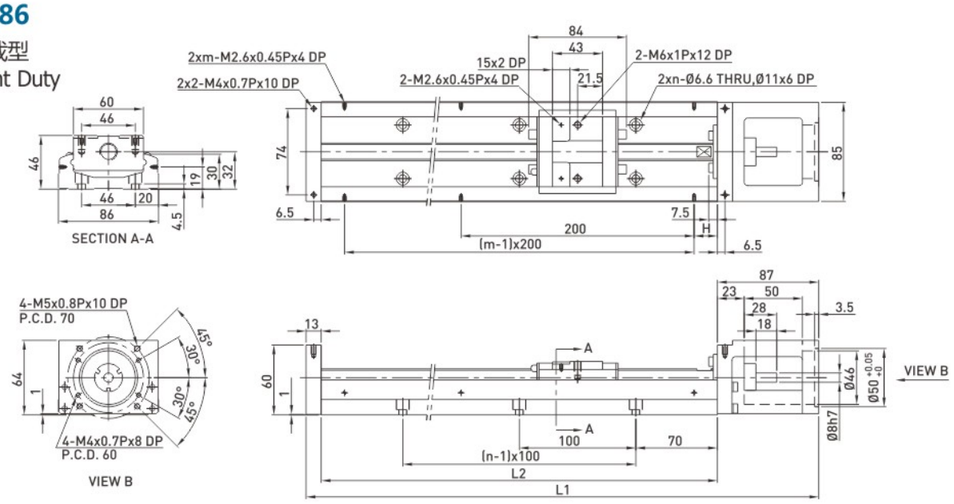

Rail Length L2 (mm)	Total Length L1 (mm)	Maximum Stroke (mm)		H (mm)	n	m	Mass (kg)	
		S1 Block	S2 Block				S1 Block	S2 Block
340	440	248.5	172.5	70	3	2	5.4	5.9
440	540	348.5	272.5	20	4	3	6.6	7.1
540	640	448.5	372.5	70	5	3	7.7	8.2
640	740	548.5	472.5	20	6	4	8.9	9.4
740	840	648.5	572.5	70	7	4	10.1	10.6
940	1040	848.5	772.5	70	9	5	11.3	11.8

KK86D
标准型
Standard

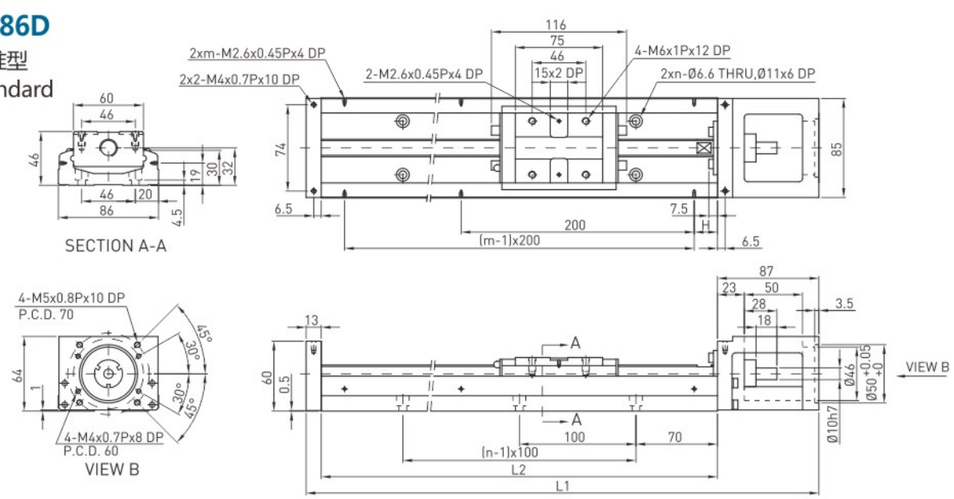

Rail Length L2 (mm)	Total Length L1 (mm)	Maximum Stroke (mm)		H (mm)	n	m	Mass (kg)	
		A1 Block	A2 Block				A1 Block	A2 Block
340	440	216.5	108.5	70	3	2	5.7	6.5
440	540	316.5	208.5	20	4	3	6.9	7.7
540	640	416.5	308.5	70	5	3	8.0	8.8
640	740	516.5	408.5	20	6	4	9.2	10.0
740	840	616.5	508.5	70	7	4	10.4	11.2
940	1040	816.5	708.5	70	9	5	11.6	12.4

KK SERIES MODULE
上银KK系列模组

KK86D
轻载型
Light Duty

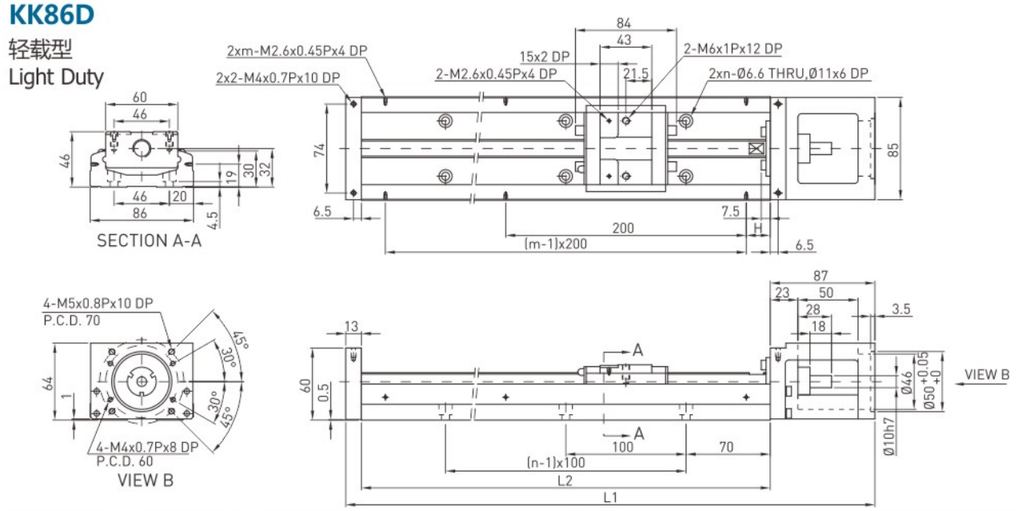

Rail Length L2 (mm)	Total Length L1 (mm)	Maximum Stroke (mm)		H (mm)	n	m	Mass (kg)	
		S1 Block	S2 Block				S1 Block	S2 Block
340	440	248.5	172.5	70	3	2	5.4	5.9
440	540	348.5	272.5	20	4	3	6.6	7.1
540	640	448.5	372.5	70	5	3	7.7	8.2
640	740	548.5	472.5	20	6	4	8.9	9.4
740	840	648.5	572.5	70	7	4	10.1	10.6
940	1040	848.5	772.5	70	9	5	11.3	11.8

KK100

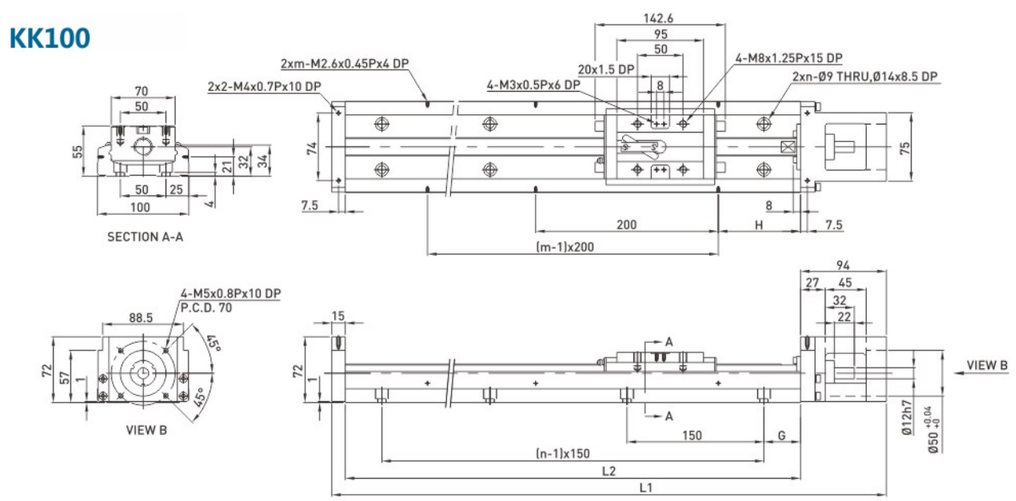

Rail Length L2 (mm)	Total Length L1 (mm)	Maximum Stroke (mm)		G (mm)	H (mm)	n	m	Mass (kg)	
		A1 Block	A2 Block					A1 Block	A2 Block
980	1089	828	700	40	90	7	5	18.6	20.3
1080	1189	928	800	15	40	8	6	20.3	22.0
1180	1289	1028	900	65	90	8	6	22.0	23.7
1280	1389	1128	1000	40	40	9	7	23.6	25.3
1380	1489	1228	1100	15	90	10	7	25.3	27.0

07

Series

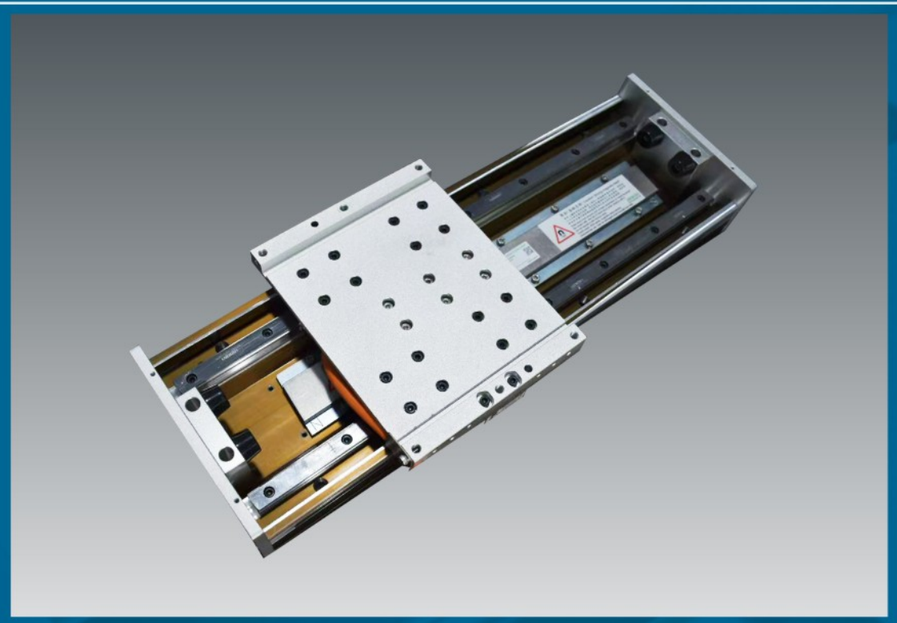

LINEAR MOTOR MODULE

直线电机模组

longzhichuang Co.,Ltd

Website: http://www.longzhi-chuang.com
Alibaba: https://longzhichuang.en.alibaba.com

LINEAR MOTOR MODULE
直线电机模组

SSA-08 SERIES

SSA-08S050

Single mover series
单动子

行程 Stroke: 100~1400

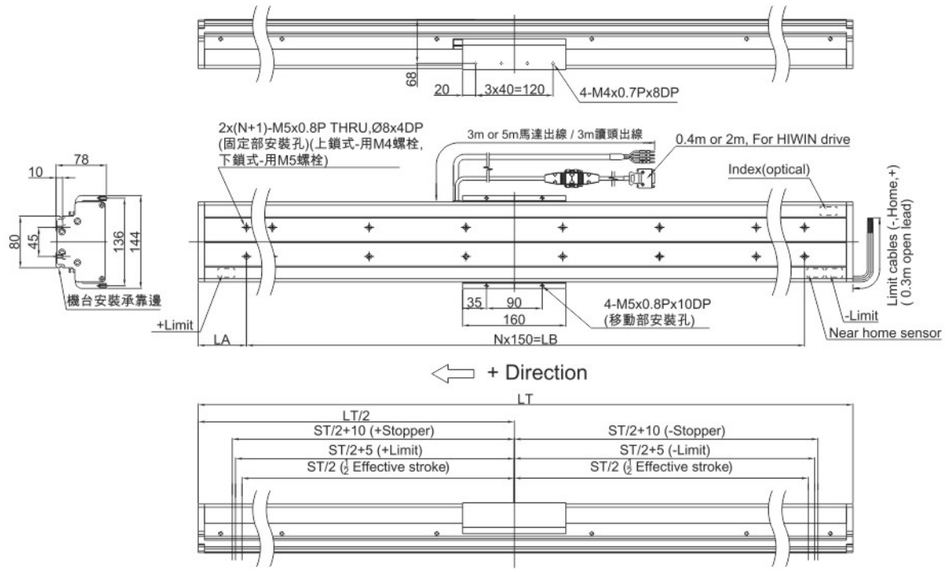

08S050																			
Modle/Effective stroke	100	150	200	250	300	350	400	450	500	550	600	650	700	750	800	850	900	950	1000
LT	350	400	450	500	550	600	650	700	750	800	850	900	950	1000	1050	1100	1150	1200	1250
N	2	2	2	3	3	3	4	4	4	5	5	5	6	6	6	7	7	7	8
LA	25	50	75	25	50	75	25	50	75	25	50	75	25	50	75	25	50	75	25
LB	300	300	300	450	450	450	600	600	600	750	750	750	900	900	900	1050	1050	1050	1200
Weight	6.8	7.3	7.8	8.2	8.7	9.1	9.5	9.9	10.4	10.9	11.3	11.8	12.1	12.6	13.1	13.5	14.0	14.4	14.8

08S050							
Modle/Effective stroke	1050	1100	1150	1200	1250	1300	1400
LT	1300	1350	1400	1450	1500	1550	1650
N	8	8	9	9	9	10	10
LA	50	75	25	50	75	25	75
LB	1200	1200	1350	1350	1350	1500	1500
Weight	15.2	15.7	16.2	16.6	17.1	17.4	18.3

负载与加速度曲线图
Load and acceleration curve

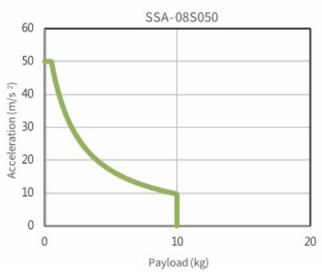

行程与速度曲线图
Stroke and speed curve

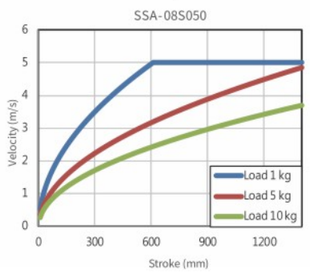

偏心负载能力曲线图
Eccentric load capacity curve

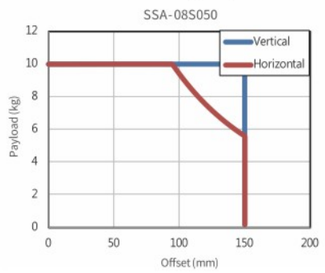

SSA-08 SERIES

SSA-08S050

Double mover series
双动子

行程 Stroke: 100~1200

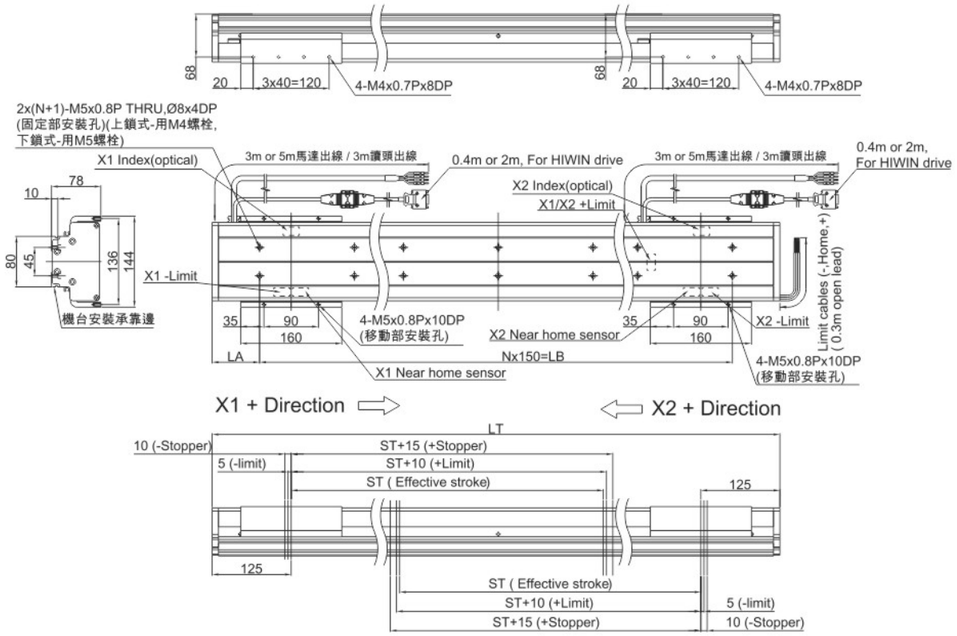

08S050																			
Modle/Effective stroke	100	150	200	250	300	350	400	450	500	550	600	650	700	750	800	850	900	950	1000
LT	550	600	650	700	750	800	850	900	950	1000	1050	1100	1150	1200	1250	1300	1350	1400	1450
N	3	3	4	4	4	5	5	5	6	6	6	7	7	7	8	8	8	9	9
LA	50	75	25	50	75	25	50	75	25	50	75	25	50	75	25	50	75	25	50
LB	450	450	600	600	600	750	750	750	900	900	900	1050	1050	1050	1200	1200	1200	1350	1350
Weight	10.0	10.5	10.9	11.4	11.9	12.3	12.7	13.1	13.6	14.0	14.5	15.0	15.3	15.8	16.2	16.7	17.2	17.6	18.0

08S050				
Modle/Effective stroke	1050	1100	1150	1200
LT	1500	1550	1600	1650
N	9	10	10	10
LA	75	25	50	75
LB	1350	1500	1500	1500
Weight	18.4	18.9	19.3	19.8

LINEAR MOTOR MODULE
直线电机模组

SSA-10 SERIES

SSA-10S100

Single mover series
单动子

行程 Stroke: 100~1400

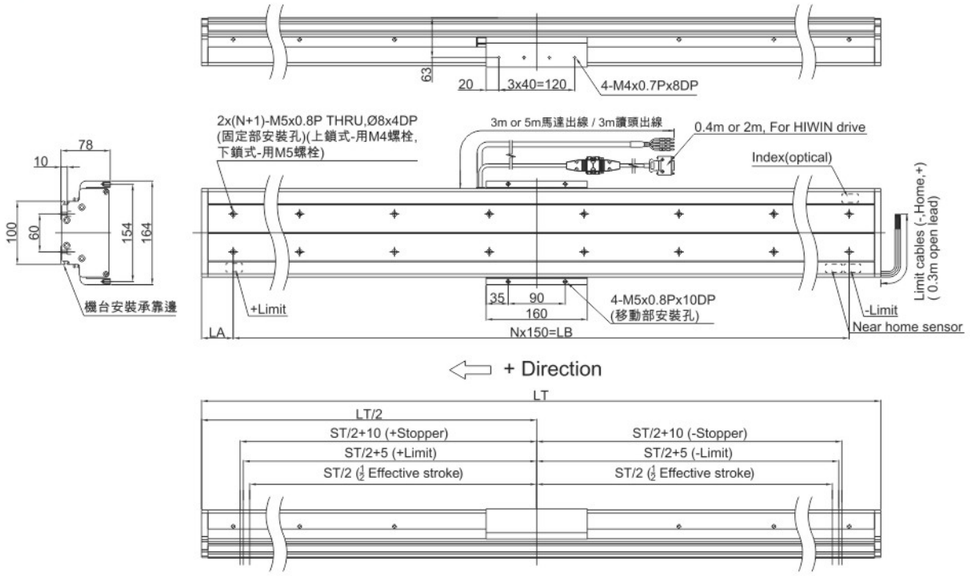

10S100																			
Modle/Effective stroke	100	150	200	250	300	350	400	450	500	550	600	650	700	750	800	850	900	950	1000
LT	350	400	450	500	550	600	650	700	750	800	850	900	950	1000	1050	1100	1150	1200	1250
N	2	2	2	3	3	3	4	4	4	5	5	5	6	6	6	7	7	7	8
LA	25	50	75	25	50	75	25	50	75	25	50	75	25	50	75	25	50	75	25
LB	300	300	300	450	450	450	600	600	600	750	750	750	900	900	900	1050	1050	1050	1200
Weight	7.5	8.0	8.5	8.9	9.4	9.9	10.4	10.9	11.4	11.7	12.2	12.7	13.2	13.7	14.2	14.5	15.0	15.5	16.1

10S100							
Modle/Effective stroke	1050	1100	1150	1200	1250	1300	1400
LT	1300	1350	1400	1450	1500	1550	1650
N	8	8	9	9	9	10	10
LA	50	75	25	50	75	25	75
LB	1200	1200	1350	1350	1350	1500	1500
Weight	16.6	17.1	17.4	17.9	18.4	18.9	19.9

负载与加速度曲线图
Load and acceleration curve

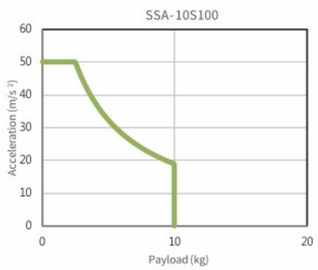

行程与速度曲线图
Stroke and speed curve

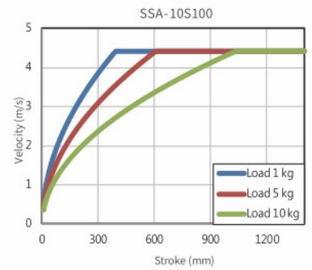

偏心负载能力曲线图
Eccentric load capacity curve

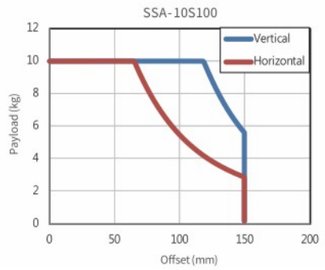

SSA-10 SERIES

SSA-10S100

Double mover series
双动子

行程 Stroke: 100~1200

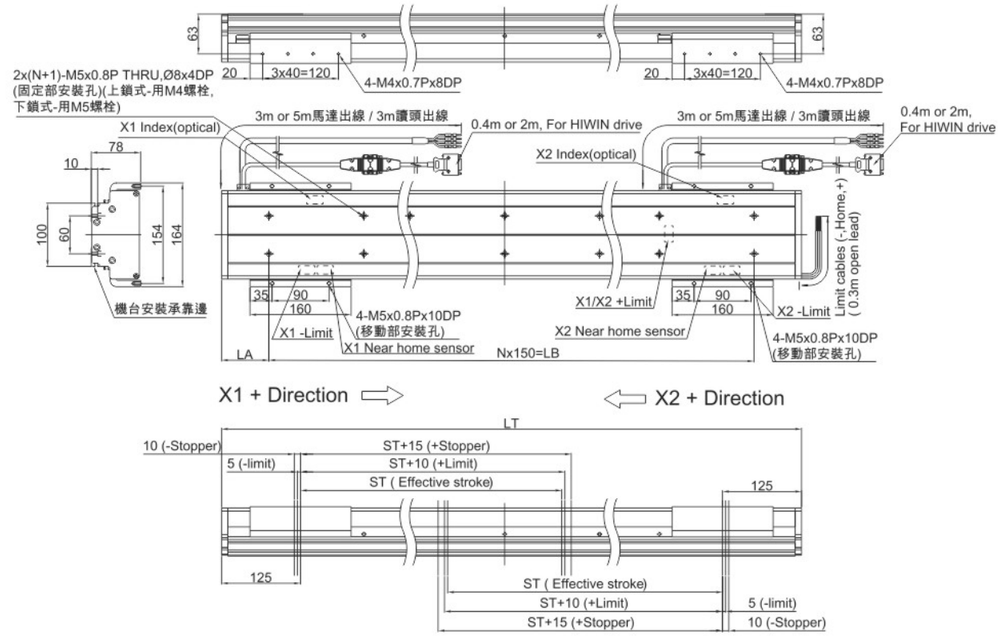

10S100																			
Modle/Effective stroke	100	150	200	250	300	350	400	450	500	550	600	650	700	750	800	850	900	950	1000
LT	550	600	650	700	750	800	850	900	950	1000	1050	1100	1150	1200	1250	1300	1350	1400	1450
N	3	3	4	4	4	5	5	5	6	6	6	7	7	7	8	8	8	9	9
LA	50	75	25	50	75	25	50	75	25	50	75	25	50	75	25	50	75	25	50
LB	450	450	600	600	600	750	750	750	900	900	900	1050	1050	1050	1200	1200	1200	1350	1350
Weight	11.0	11.5	12.0	12.3	12.8	13.3	13.8	14.3	14.8	15.2	15.7	16.2	16.7	17.2	17.7	18.0	18.5	19.0	19.5

10S100				
Modle/Effective stroke	1050	1100	1150	1200
LT	1500	1550	1600	1650
N	9	10	10	10
LA	75	25	50	75
LB	1350	1500	1500	1500
Weight	20.0	20.5	20.9	21.4

LINEAR MOTOR MODULE
直线电机模组

SSA-13 SERIES

SSA-13S100

Single mover series
单动子

行程 Stroke: 100~2700

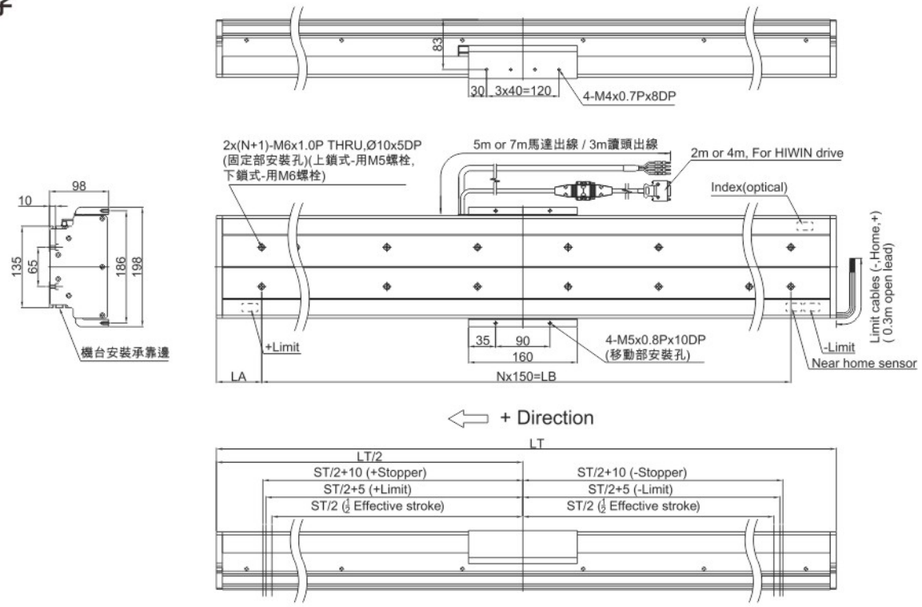

13S100																			
Modle/Effective stroke	100	150	200	250	300	350	400	450	500	550	600	650	700	750	800	850	900	950	1000
LT	350	400	450	500	550	600	650	700	750	800	850	900	950	1000	1050	1100	1150	1200	1250
N	2	2	2	3	3	3	4	4	4	5	5	5	6	6	6	7	7	7	8
LA	25	50	75	25	50	75	25	50	75	25	50	75	25	50	75	25	50	75	25
LB	300	300	300	450	450	450	600	600	600	750	750	750	900	900	900	1050	1050	1050	1200
Weight	11.4	12.3	13.1	13.8	14.6	15.5	16.3	17.2	18.0	18.7	19.5	20.4	21.2	22.0	22.9	23.6	24.4	25.2	26.1

13S100																				
Modle/Effective stroke	1050	1100	1150	1200	1250	1300	1400	1500	1600	1700	1800	1900	2000	2100	2200	2300	2400	2500	2600	2700
LT	1300	1350	1400	1450	1500	1550	1650	1750	1850	1950	2050	2150	2250	2350	2450	2550	2650	2750	2850	2950
N	8	8	9	9	9	10	10	11	12	12	13	14	14	15	16	16	17	18	18	19
LA	50	75	25	50	75	25	75	50	25	75	50	25	75	50	25	75	50	25	75	50
LB	1200	1200	1350	1350	1350	1500	1500	1650	1800	1800	1950	2100	2100	2250	2400	2400	2550	2700	2700	2850
Weight	26.9	27.7	28.4	29.3	30.1	30.9	32.6	34.1	35.8	37.5	39	40.7	42.4	43.9	45.6	47.2	48.8	50.4	52.1	53.6

负载与加速度曲线图
Load and acceleration curve

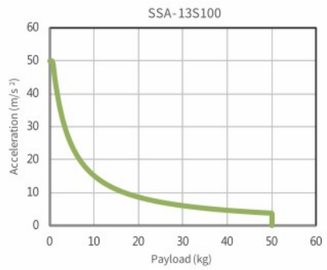

行程与速度曲线图
Stroke and speed curve

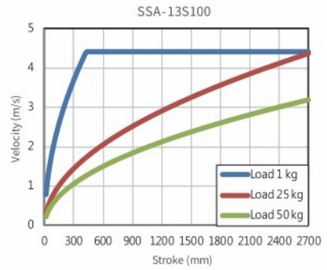

偏心负载能力曲线图
Eccentric load capacity curve

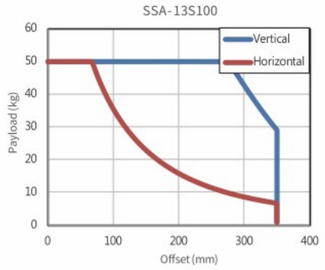

SSA-13 SERIES

SSA-13S100

Double mover series
双动子

行程 Stroke: 100~2500

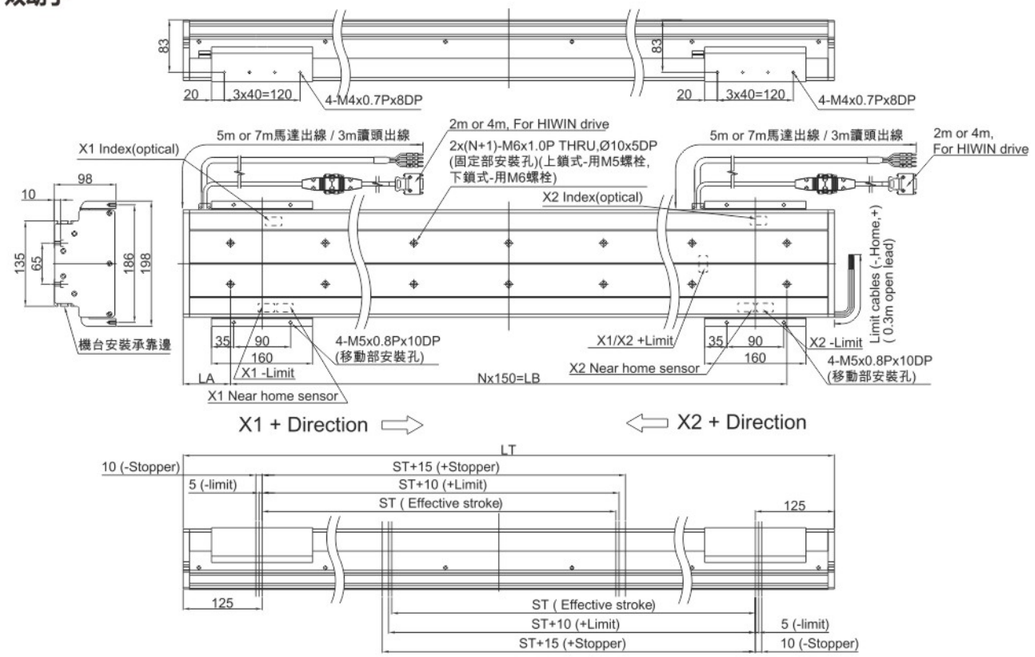

13S100																			
Modle/Effective stroke	100	150	200	250	300	350	400	450	500	550	600	650	700	750	800	850	900	950	1000
LT	550	600	650	700	750	800	850	900	950	1000	1050	1100	1150	1200	1250	1300	1350	1400	1450
N	3	3	4	4	4	5	5	5	6	6	6	7	7	7	8	8	8	9	9
LA	50	75	25	50	75	25	50	75	25	50	75	25	50	75	25	50	75	25	50
LB	450	450	600	600	600	750	750	750	900	900	900	1050	1050	1050	1200	1200	1200	1350	1350
Weight	17.6	18.4	19.2	19.9	20.8	21.6	22.4	23.3	24.1	24.8	25.6	26.5	27.3	28.1	29.0	29.7	30.5	31.3	32.2

13S100																			
Modle/Effective stroke	1050	1100	1150	1200	1250	1300	1400	1500	1600	1700	1800	1900	2000	2100	2200	2300	2400	2500
LT	1500	1550	1600	1650	1700	1750	1850	1950	2050	2150	2250	2350	2450	2550	2650	2750	2850	2950
N	9	10	10	10	11	11	12	12	13	14	14	15	16	16	17	18	18	19
LA	75	25	50	75	25	50	25	75	50	25	75	50	25	75	50	25	75	50
LB	1350	1500	1500	1500	1650	1650	1800	1800	35.2	2100	2100	2250	2400	2400	2550	2700	2700	2850
Weight	33.0	33.9	34.5	35.4	36.2	37.1	38.7	40.3	41.9	43.6	45.1	46.8	48.5	50	51.7	53.4	54.9	56.6

LINEAR MOTOR MODULE
直线电机模组

SSA-18 SERIES

SSA-18S100
SSA-18C100

Single mover series
单动子

行程 Stroke: 100~2700

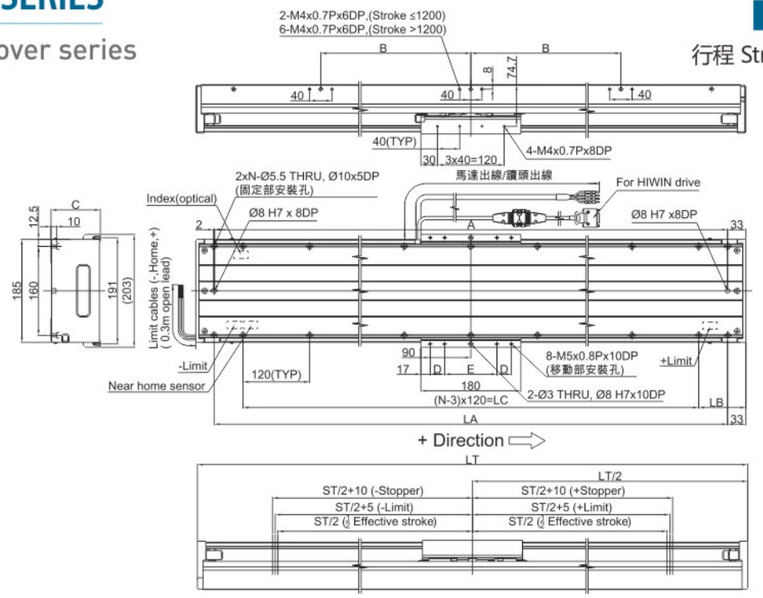

18S100,18C100																				
Modle/Effective stroke		100	150	200	250	300	350	400	450	500	550	600	650	700	750	800	850	900	950	1000
LT		390	440	490	540	590	640	690	740	790	840	890	940	990	1040	1090	1140	1190	1240	1290
N		5	5	5	5	7	7	7	7	7	9	9	9	9	9	11	11	11	13	13
LA		324	374	424	474	524	574	624	674	724	774	824	874	924	974	1024	1074	1124	1174	1224
LB		75	100	125	150	55	80	105	130	155	60	85	110	135	160	65	90	115	20	45
LC		240	240	240	240	480	480	480	480	480	720	720	720	720	720	960	960	960	1200	1200
A		323	373	423	473	523	573	623	673	723	773	823	873	923	973	1023	1073	1123	1173	1223
B				-	-	-	-	-	-	-	-	-	-	-	-	-	-	-	-	-
C		88.7																		
D		26																		
E		94																		
Weight	18S100	10.0	10.8	12.0	12.9	13.8	14.7	15.6	16.5	17.4	18.3	19.2	20.1	21.0	21.9	22.8	23.7	24.6	25.5	26.4
	18C100	13.5	14.5	15.9	17.0	18.1	19.2	20.3	21.4	22.5	23.7	24.8	25.9	27.0	28.1	29.2	30.3	31.4	32.6	33.7

18S100,18C100																				
Modle/Effective stroke		1050	1100	1150	1200	1250	1300	1400	1500	1600	1700	1800	1900	2000	2100	2200	2300	2400	2500	2600	2700
LT		1340	1390	1440	1490	1540	1590	1690	1790	1890	1990	2090	2190	2290	2390	2490	2590	2690	2790	2890	2990
N		13	13	13	13	15	15	15	17	17	17	19	19	21	21	23	23	23	25	25	27
LA		1274	1324	1374	1424	1474	1524	1624	1724	1824	1924	2024	2124	2224	2324	2424	2524	2624	2724	2824	2924
LB		70	95	120	145	50	75	125	55	105	155	85	135	65	115	45	95	145	75	125	55
LC		1200	1200	1200	1200	1440	1440	1440	1680	1680	1680	1920	1920	2160	2160	2400	2400	2400	2640	2640	2880
A		1273	1323	1373	1423	1473	1523	1623	1723	1823	1923	2023	2123	2223	2323	2423	2523	2623	2723	2823	2923
B		-	-	-	-	360	360	360	600	600	600	600	840	840	840	840	840	1080	1080	1080	1080
C		88.7								108.7											
D		26								50											
E		94								46											
Weight	18S100	27.3	28.2	29.1	30.0	30.9	31.8	33.6	35.4	38.4	40.2	42.0	43.8	45.6	47.4	49.2	51.0	52.7	54.5	56.3	58.1
	18C100	34.8	35.9	37.0	38.1	39.2	40.3	42.6	44.8	48.2	50.4	52.7	54.9	57.1	59.3	61.5	63.8	66.0	68.2	70.4	72.7

负载与加速度曲线图
Load and acceleration curve

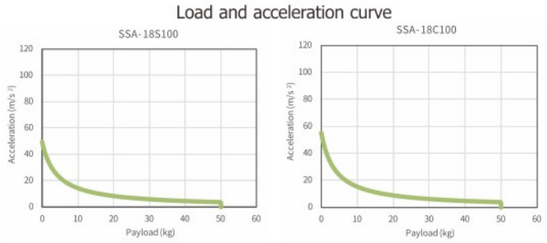

行程与速度曲线图
Stroke and speed curve

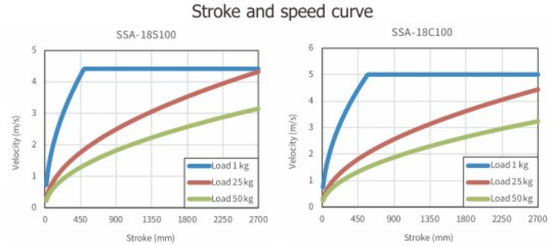

LINEAR MOTOR MODULE
直线电机模组

SSA-18 SERIES

SSA-18S100
SSA-18C100

Double mover series
双动子

行程 Stroke: 100~2400

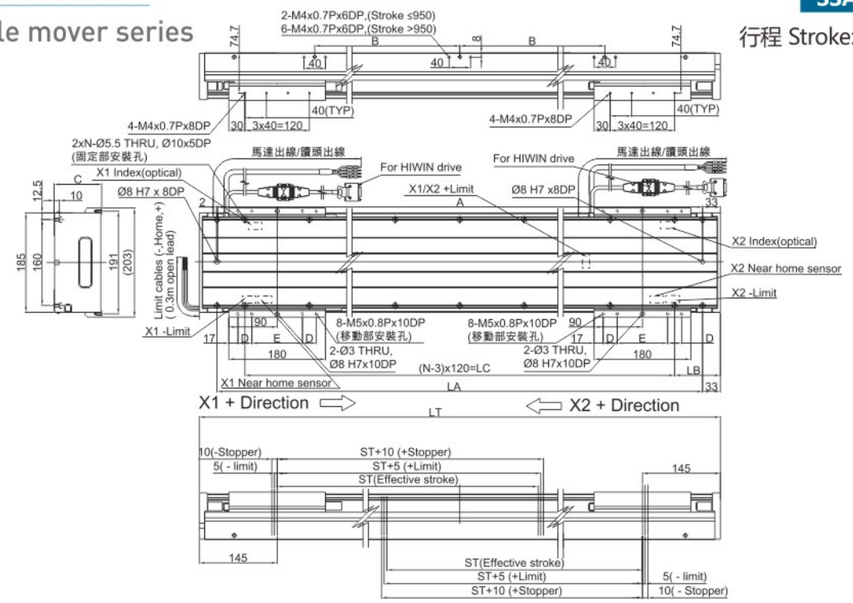

18S100,18C100																				
Modle		100	150	200	250	300	350	400	450	500	550	600	650	700	750	800	850	900	950	1000
Effective stroke		130	180	230	280	330	380	430	480	530	580	630	680	730	780	830	880	930	980	1030
LT		640	690	740	790	840	890	940	990	1040	1090	1140	1190	1240	1290	1340	1390	1440	1490	1540
N		7	7	7	7	9	9	9	9	9	11	11	11	13	13	13	13	13	13	15
LA		574	624	674	724	774	824	874	924	974	1024	1074	1124	1174	1224	1274	1324	1374	1424	1474
LB		80	105	130	155	60	85	110	135	160	65	90	115	20	45	70	95	120	145	50
LC		480	480	480	480	720	720	720	720	720	960	960	960	1200	1200	1200	1200	1200	1200	1440
A		573	623	673	723	773	823	873	923	973	1023	1073	1123	1173	1223	1273	1323	1373	1423	1473
B		-	-	-	-	-	-	-	-	-	-	-	-	-	-	-	-	-	-	360
C		88.7																		
D		26																		
E		94																		
Weight	18S100	17.6	18.5	19.4	20.3	21.2	22.1	23.0	23.9	24.8	25.7	26.6	27.5	28.4	29.3	30.2	31.1	32.0	32.9	33.8
	18C100	21.9	23.0	24.1	25.2	26.3	27.5	28.6	29.7	30.8	31.9	33.0	34.1	35.2	36.3	37.5	38.6	39.7	40.8	41.9

18S100,18C100																		
Modle	1050	1100	1150	1200	1250	1300	1400	1500	1600	1700	1800	1900	2000	2100	2200	2300	2400
Effective stroke	1080	1130	1180	1230	1280	1330	1430	1530	1630	1730	1830	1930	2030	2130	2230	2330	2430
LT	1590	1640	1690	1740	1790	1840	1940	2040	2140	2240	2340	2440	2540	2640	2740	2840	2940
N	15	15	15	15	17	17	17	19	19	19	21	23	23	23	25	25	25
LA	1524	1574	1624	1674	1724	1774	1874	1974	2074	2174	2274	2374	2474	2574	2674	2774	2874
LB	75	100	125	150	55	80	130	60	110	160	90	20	70	120	50	100	150
LC	1440	1440	1440	1440	1680	1680	1680	1920	1920	1920	2160	2400	2400	2400	2640	2640	2640
A	1523	1573	1623	1673	1723	1773	1873	1973	2073	2173	2273	2373	2473	2573	2673	2773	2873
B	360	360	360	600	600	600	600	600	600	840	840	840	840	840	1080	1080	1080
C	88.7					108.7											
D	26					50											
E	94					46											
Weight 18S100	34.7	35.6	36.5	37.4	38.3	41.6	43.4	45.2	47.0	48.8	50.6	52.4	54.2	55.9	57.7	59.5	61.3
Weight 18C100	43.0	44.1	45.2	46.3	47.5	51	53.2	55.4	57.6	59.9	62.1	64.3	66.5	68.8	71.0	73.2	75.4

偏心负载能力曲线图
Eccentric load capacity curve

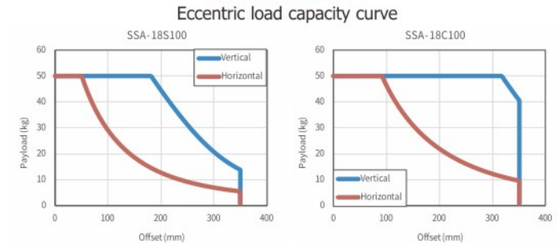

LINEAR MOTOR MODULE
直线电机模组

SSA-20 SERIES

SSA-20S300
SSA-20C100

Single mover series
单动子

行程 Stroke: 100~2600

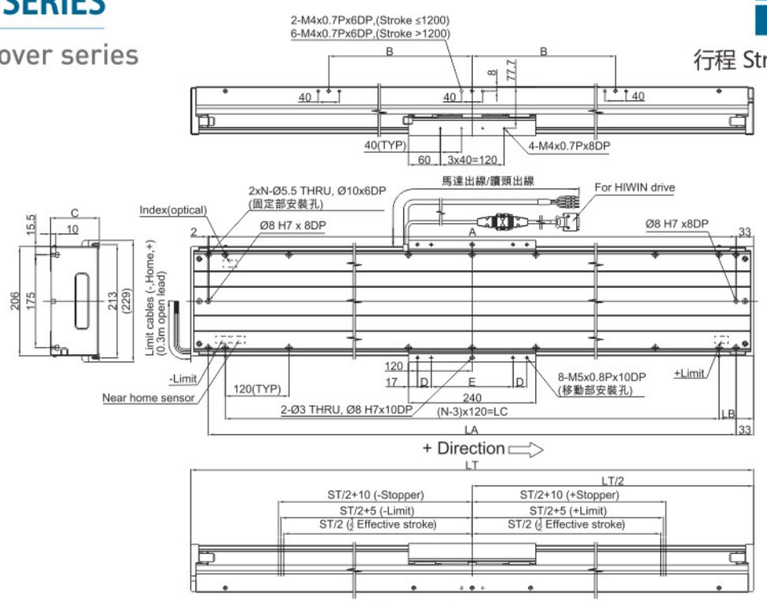

20S300,20C100																				
Modle/Effective stroke		100	150	200	250	300	350	400	450	500	550	600	650	700	750	800	850	900	950	1000
LT		450	500	550	600	650	700	750	800	850	900	950	1000	1050	1100	1150	1200	1250	1300	1350
N		5	5	5	7	7	7	7	7	9	9	9	11	11	11	11	11	11	13	13
LA		384	434	484	534	584	634	684	734	784	834	884	934	984	1034	1084	1134	1184	1234	1284
LB		105	130	155	60	85	110	135	160	65	90	115	20	45	70	95	120	145	50	75
LC		240	240	240	480	480	480	480	480	720	720	720	960	960	960	960	960	960	1200	1200
A		383	433	483	533	583	633	683	733	783	833	883	933	983	1033	1083	1133	1183	1233	1283
B		-	-	-	-	-	-	-	-	-	-	-	-	-	-	-	-	-	-	-
C		91.7																		
D		26																		
E		154																		
Weight	20S300	15.5	16.5	18.0	19.1	20.2	21.3	22.4	23.5	24.6	25.7	26.8	27.9	29.0	30.1	31.2	32.3	33.4	34.5	35.6
	20C100	16.1	17.5	19.4	20.9	22.4	23.9	25.4	26.9	28.4	29.9	31.4	32.9	34.4	36.0	37.5	39.0	40.5	42.0	43.5

20S300,20C100																				
e/Effective stroke		1050	1100	1150	1200	1250	1300	1400	1500	1600	1700	1800	1900	2000	2100	2200	2300	2400	2500	2600
LT		1400	1450	1500	1550	1600	1650	1750	1850	1950	2050	2150	2250	2350	2450	2550	2650	2750	2850	2950
N		13	13	13	15	15	15	15	17	17	19	19	21	21	21	23	23	25	25	25
LA		1334	1384	1434	1484	1534	1584	1684	1784	1884	1984	2084	2184	2284	2384	2484	2584	2684	2784	2884
LB		100	125	150	55	80	105	155	85	135	65	115	45	95	145	75	125	55	105	155
LC		1200	1200	1200	1440	1440	1440	1440	1680	1680	1920	1920	2160	2160	2160	2400	2400	2640	2640	2640
A		1333	1383	1433	1483	1533	1583	1683	1783	1883	1983	2083	2183	2283	2383	2483	2583	2683	2783	2883
B		-	-	-	-	360	360	600	600	600	600	600	840	840	840	840	840	1080	1080	1080
C		91.7								111.7										
D		26								50										
E		154								106										
Weight	20S300	36.7	37.8	38.9	40.0	41.1	42.2	44.4	46.6	50.8	53.0	55.2	57.4	59.6	61.8	64.0	66.2	68.4	70.6	72.8
	20C100	45.0	46.5	48.0	49.5	51.0	52.6	55.6	58.6	63.6	66.6	69.6	72.7	75.7	78.7	81.7	84.7	87.8	90.8	93.8

负载与加速度曲线图
Load and acceleration curve

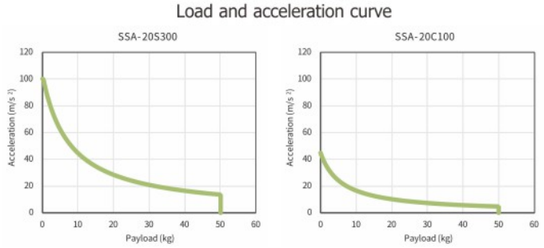

行程与速度曲线图
Stroke and speed curve

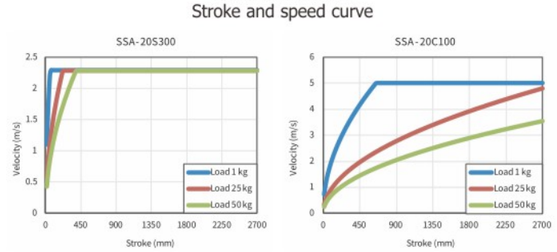

LINEAR MOTOR MODULE
直线电机模组

SSA-20 SERIES

SSA-20S300
SSA-20C100

Double mover series
双动子

行程 Stroke: 100~2300

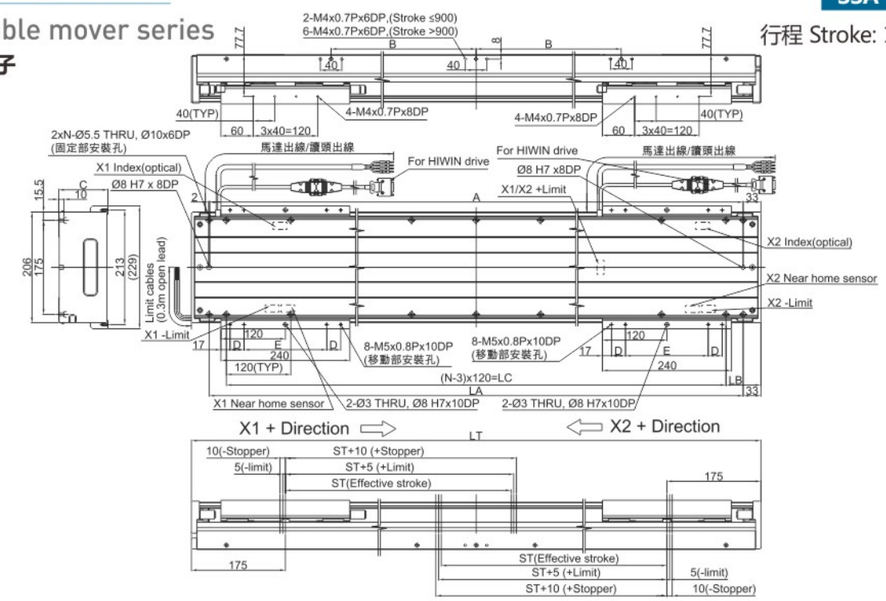

20S300,20C100																				
Modle		100	150	200	250	300	350	400	450	500	550	600	650	700	750	800	850	900	950	1000
Effective stroke		120	170	220	270	320	370	420	470	520	570	620	670	720	770	820	870	920	970	1020
LT		750	800	850	900	950	1000	1050	1100	1150	1200	1250	1300	1350	1400	1450	1500	1550	1600	1650
N		7	7	9	9	9	11	11	11	11	11	11	13	13	13	13	13	15	15	15
LA		684	734	784	834	884	934	984	1034	1084	1134	1184	1234	1284	1334	1384	1434	1484	1534	1584
LB		135	160	65	90	115	20	45	70	95	120	145	50	75	100	125	150	55	80	105
LC		480	480	720	720	720	960	960	960	960	960	960	1200	1200	1200	1200	1200	1440	1440	1440
A		683	733	783	833	883	933	983	1033	1083	1133	1183	1233	1283	1333	1383	1433	1483	1533	1583
B		-	-	-	-	-	-	-	-	-	-	-	-	-	-	-	-	-	360	360
C		91.7																		
D		26																		
E		154																		
Weight	20S300	28.0	29.1	30.2	31.3	32.4	33.5	34.6	35.7	36.8	37.9	39.0	40.1	41.2	42.3	43.4	44.5	45.6	46.7	47.8
	20C100	29.3	30.8	32.3	33.8	35.3	36.8	38.3	39.9	41.4	42.9	44.4	45.9	47.4	48.9	50.4	51.9	53.4	54.9	56.5

20S300,20C100																	
Modle		1050	1100	1150	1200	1250	1300	1400	1500	1600	1700	1800	1900	2000	2100	2200	2300
Effective stroke		1070	1120	1170	1220	1270	1320	1420	1520	1620	1720	1820	1920	2020	2120	2220	2320
LT		1700	1750	1800	1850	1900	1950	2050	2150	2250	2350	2450	2550	2650	2750	2850	2950
N		15	15	15	17	17	17	19	19	21	21	21	23	23	25	25	25
LA		1634	1684	1734	1784	1834	1884	1984	2084	2184	2284	2384	2484	2584	2684	2784	2884
LB		130	155	60	85	110	135	65	115	45	95	145	75	125	55	105	155
LC		1440	1440	1680	1680	1680	1680	1920	1920	2160	2160	2160	2400	2400	2640	2640	2640
A		1633	1683	1733	1783	1833	1883	1983	2083	2183	2283	2383	2483	2583	2683	2783	2883
B		600	600	600	600	600	600	600	600	840	840	840	840	840	1080	1080	1080
C		91.7				111.7											
D		26				50											
E		154				106											
Weight	20S300	48.9	50.0	51.1	52.2	55.3	56.4	58.6	60.8	66	67.2	69.4	71.6	73.8	76	78.2	80.4
	20C100	58.0	59.5	61.0	62.5	68	69.5	72.5	75.5	78.6	81.6	84.6	87.6	90.6	93.7	96.7	99.7

偏心负载能力曲线图
Eccentric load capacity curve

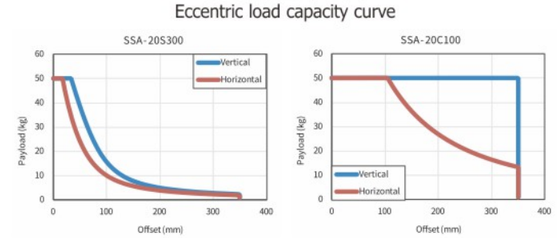

08

Series

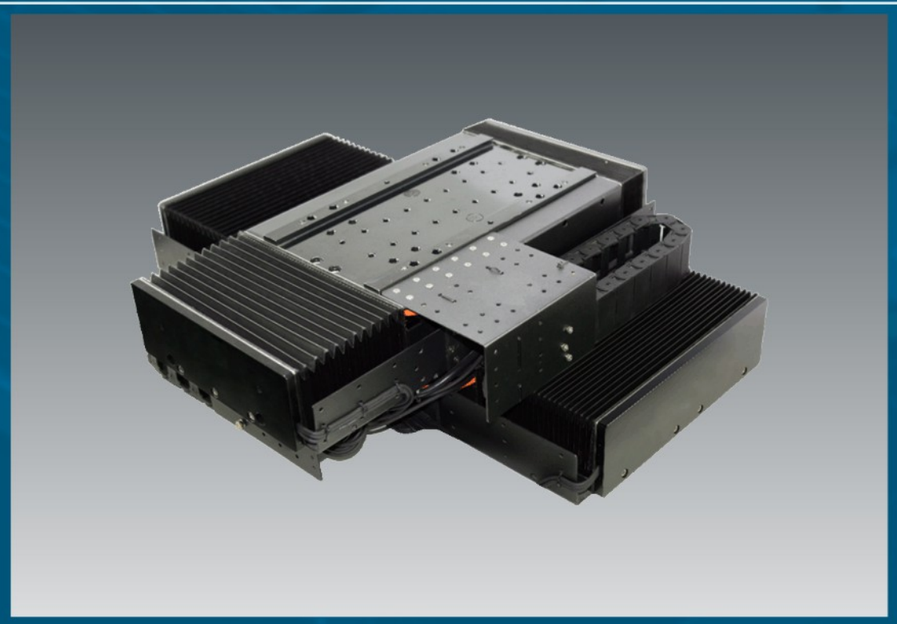

SUPER PRECISION POSITIONING TABLE

精密定位平台

longzhichuang Co.,Ltd

Website: http://www.longzhi-chuang.com
Alibaba: https://longzhichuang.en.alibaba.com

PAGE.
83~92

TX···M

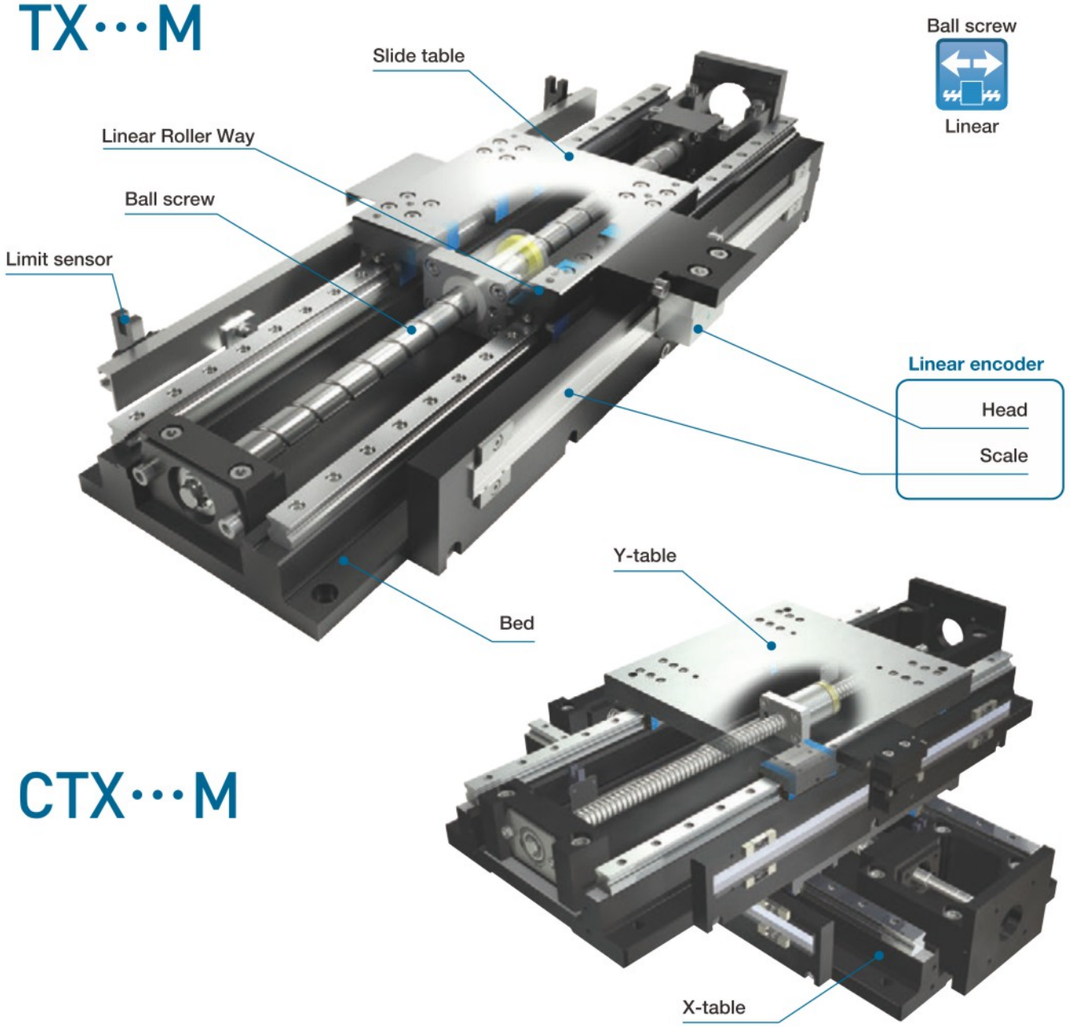

CTX···M

Major product specifications

Driving method	Precision ball screw
Linear motion rolling guide	Linear Roller Way（roller type）
Built-in lubrication part	Lubrication part "C-Lube" is built-in
Material of table and bed	Cast iron
Sensor	Provided as standard

Accuracy

unit: mm

Positioning repeatability	±0.0005～0.0010
Positioning accuracy	0.003～0.020
Lost motion	0.001
Parallelism in table motion A	0.005～0.011
Parallelism in table motion B	–
Attitude accuracy	5～11sec
Straightness	0.003～0.008
Backlash	–

POINTS

◆ Ultimate high accuracy table of rolling guide type

High precision, high rigidity Precision Positioning Table LH based positioning table with positioning accuracy almost the same as Air Stage with ultimate rolling guide C-Lube Linear Roller Way Super MX incorporated and by a thorough investigation of the accuracy of each part.

◆ High positioning accuracy and resolution performance realized with an onboard super high accuracy linear encoder

Fuly closed loop control is configure and the positioning accuracy of the entire stroke is guaranteed with a direct feed back of positional information from a super high accuracy linear encoder.

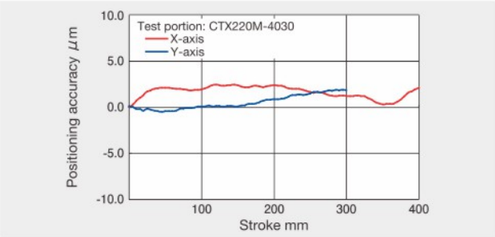

◆ Ultimate high running performance produced by adopting roller type linear motion rolling guide

Ultimate running accuracy is achieved since components processed and assembled with high accuracy are combined with C-Lube Linear Roller Way Super MX that exhibits the highest level of running performance with a rolling guide.

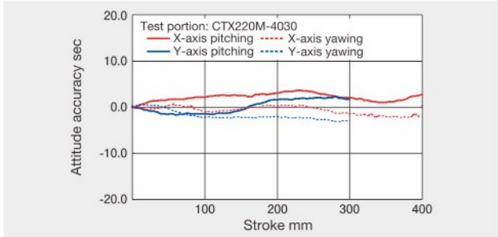

◆ Absolute linear encoder can be selected

For the linear encoder, select either absolute type or incremental type. Absolute types do not require returning to origin and can handle both high resolution and high-speed travel.

◆ Simple system configuration

The simple system configuration provides space saving and cost reduction since an air supply device for driving, like an Air Stage, is not required.

VARIATION

Shape	Model and size	Table width (mm)	Stroke length（mm）								
			100	150	200	250	300	400	500	600	800
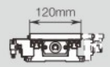	TX120M	120	☆	☆	☆	☆	☆	–	–	–	–
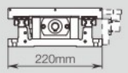	TX220M	220	–	☆	☆	☆	☆	☆	–	–	–
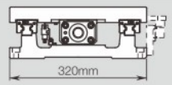	TX320M	320	–	–	–	–	☆	☆	☆	–	–
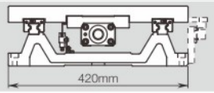	TX420M	420	–	–	–	–	–	–	☆	☆	☆

1N=0.102kgf=0.2248lbs.
1mm=0.03937inch

SUPER PRECISION POSITIONING TABLE
精密定位平台

TX120M

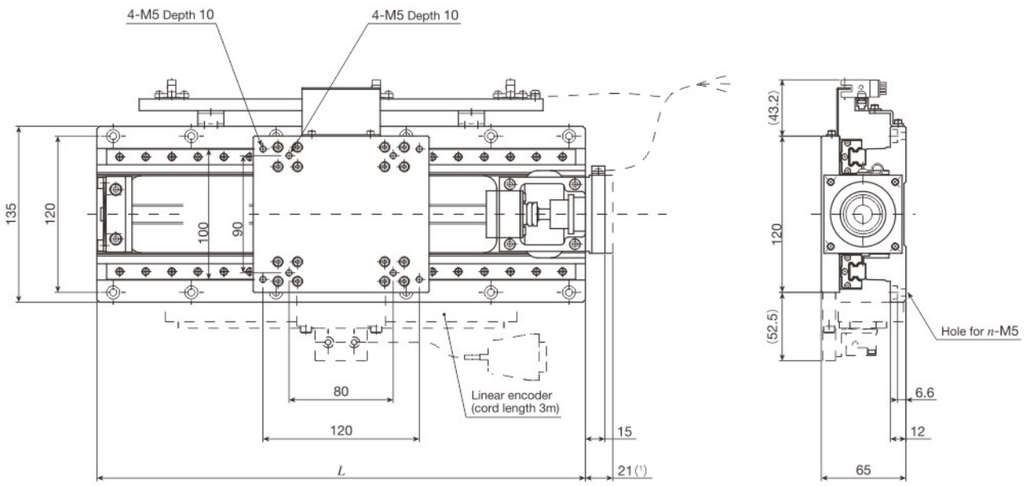

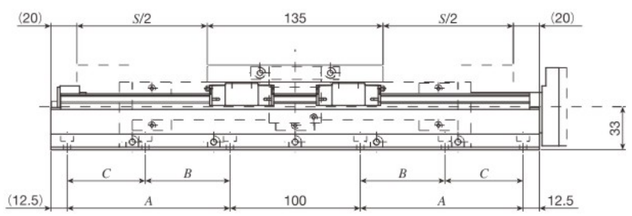

unit: mm

Identification number	Stroke length S	Overall length L	Mounting holes of bed				Mass (Ref.) kg
			A	B	C	n	
TX120M-100	100	275	75	–	–	8	12
TX120M-150	150	325	100	–	–	8	13
TX120M-200	200	375	125	–	–	8	14
TX120M-250	250	425	150	75	75	12	16
TX120M-300	300	475	175	100	75	12	17

SUPER PRECISION POSITIONING TABLE
精密定位平台

TX220M

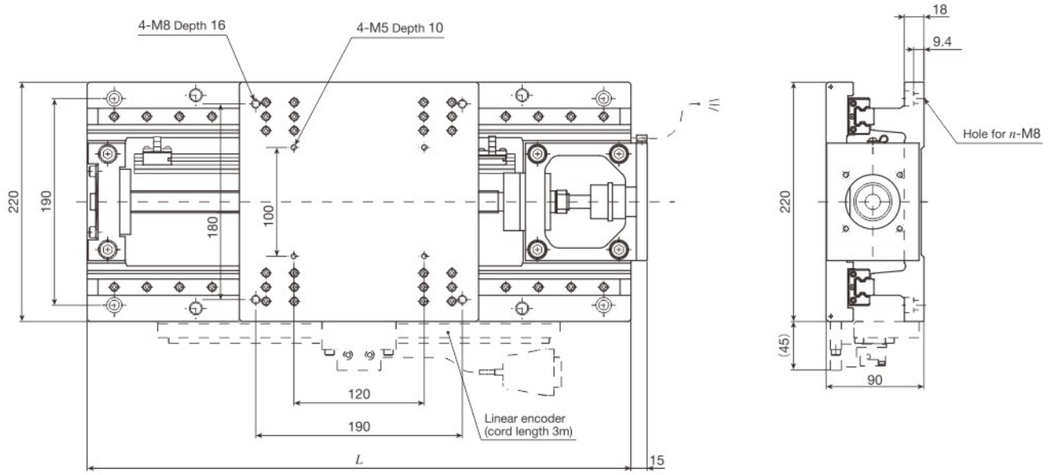

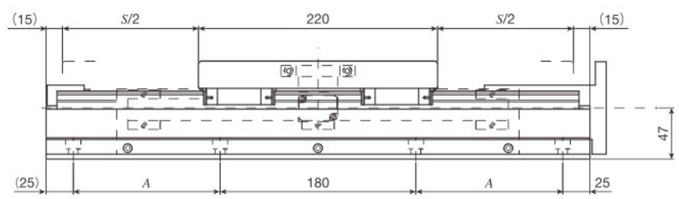

unit: mm

Identification number	Stroke length S	Overall length L	Mounting holes of bed		Mass (Ref.) kg
			A (the number of holes×pitch)	n	
TX220M-150	150	400	85	8	34
TX220M-200	200	450	110	8	37
TX220M-250	250	500	135	8	39
TX220M-300	300	550	160	8	42
TX220M-400	400	650	210 (2×105)	12	47

SUPER PRECISION POSITIONING TABLE
精密定位平台

TX320M

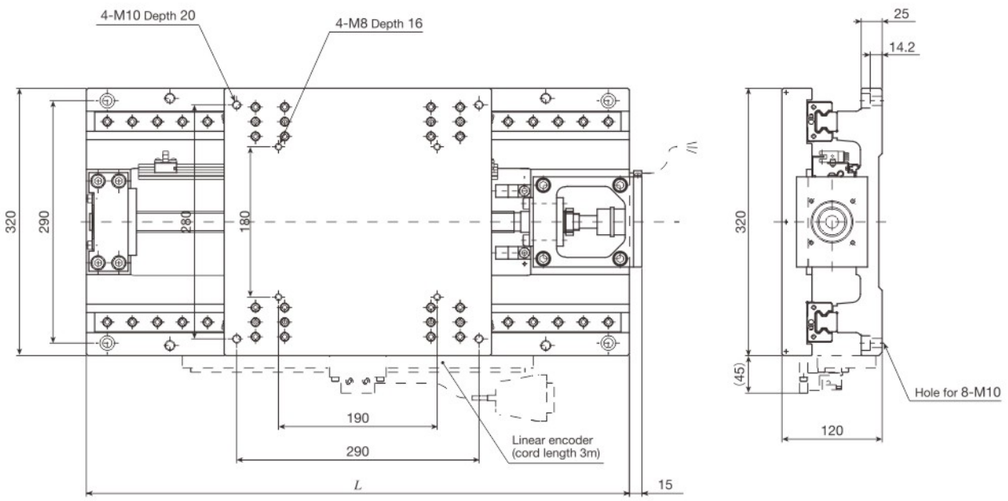

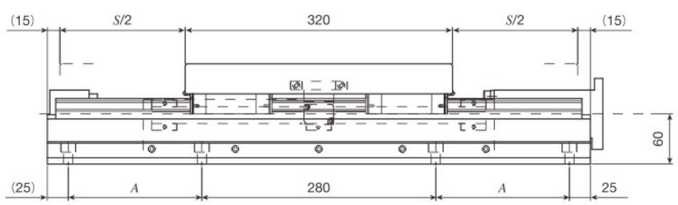

unit: mm

Identification number	Stroke length *S*	Overall length *L*	Mounting holes of bed *A*	Mass (Ref.) kg
TX320M-300	300	650	160	104
TX320M-400	400	750	210	115
TX320M-500	500	850	260	124

SUPER PRECISION POSITIONING TABLE
精密定位平台

TX420M

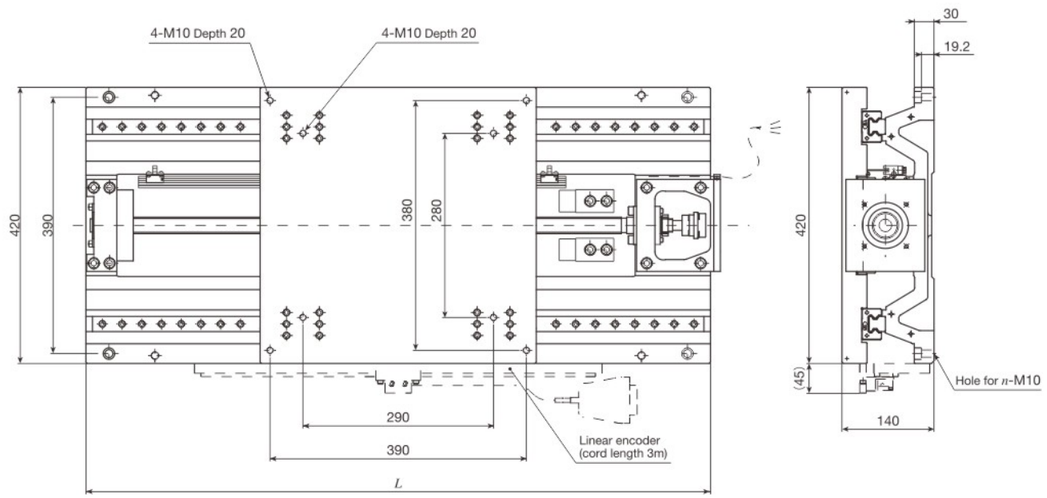

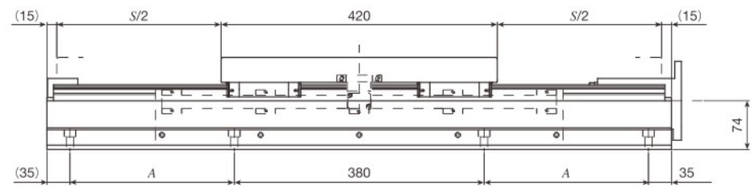

unit: mm

Identification number	Stroke length *S*	Overall length *L*	Mounting holes of bed		Mass (Ref.) kg
			A (the number of holes×pitch)	*n*	
TX420M-500	500	950	250	8	183
TX420M-600	600	1 050	300	8	197
TX420M-800	800	1 250	400 (2×200)	12	223

CTX120M

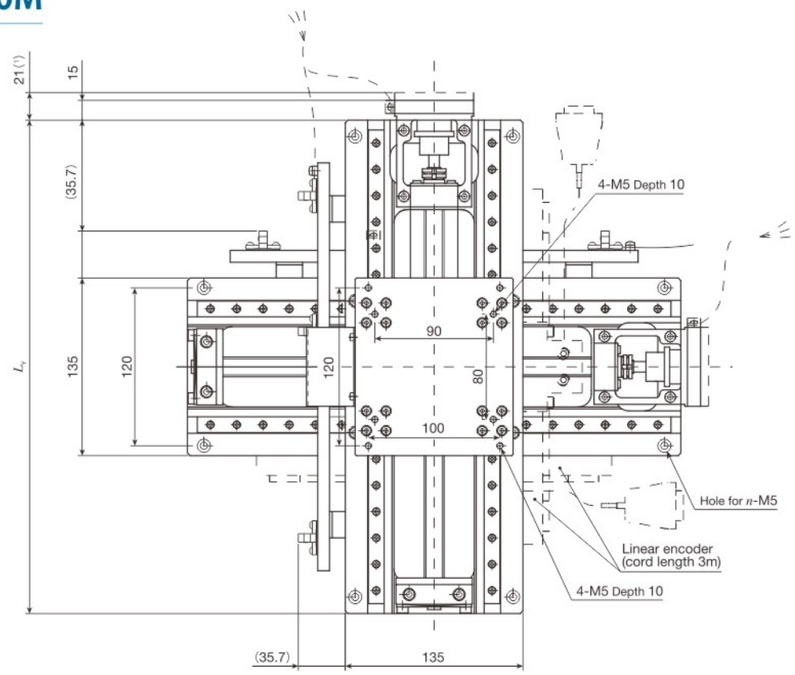

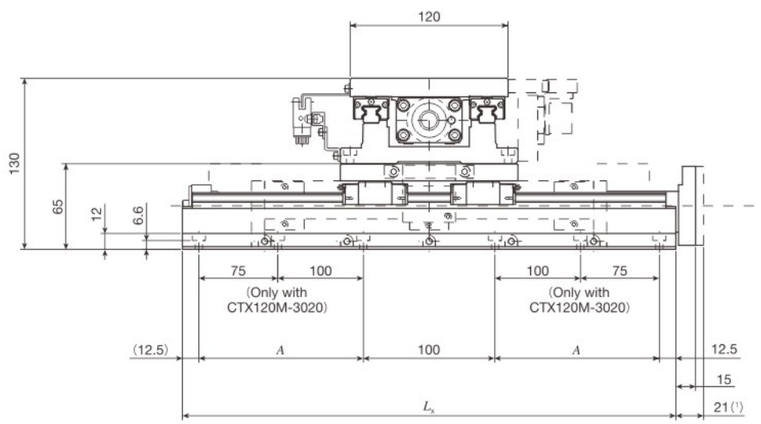

unit: mm

Identification number	Stroke length S		Overall length		Mounting holes of bed		Mass (Ref.) kg
	X-axis	Y-axis	L_X	L_Y	A	n	
CTX120M-1010	100	100	275	275	75	8	23
CTX120M-2010	200	100	375	275	125	8	26
CTX120M-2020	200	200	375	375	125	8	28
CTX120M-3020	300	200	475	375	175	12	31

Note (1) This applies to AT401 and AT405.
Remarks 1. The combination for CTX in the above figure is the standard configuration.
2. Since other combinations of stroke lengths other than those listed above, different table sizes, as well as production of cableveyor

CTX220M

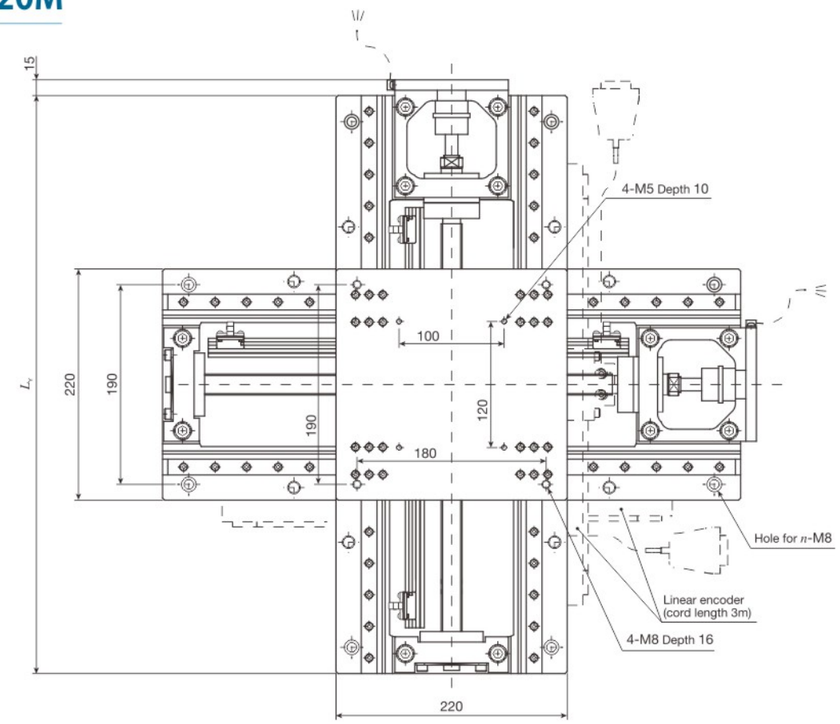

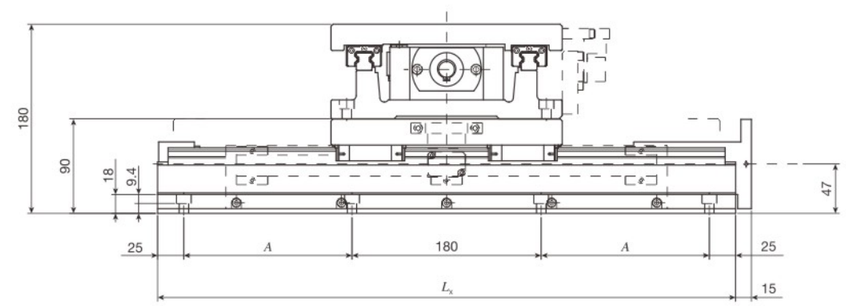

unit: mm

Identification number	Stroke length S		Overall length		Mounting holes of bed		Mass (Ref.) kg
	X-axis	Y-axis	L_X	L_Y	A (the number of holes×pitch)	n	
CTX220M-2020	200	200	450	450	110	8	73
CTX220M-3020	300	200	550	450	160	8	78
CTX220M-3030	300	300	550	550	160	8	83
CTX220M-4030	400	300	650	550	210 (2×105)	12	88

Remarks 1. The combination for CTX in the above figure is the standard configuration.
2. Since other combinations of stroke lengths other than those listed above, different table sizes, as well as production of cableveyor